S/T Mid Size Utility

BODY BUILDERS INSTRUCTIONS **1**
Section 0 – General Instructions **1**
Section 1 – Body **2**
Air Conditioning 3
Section 2 – Frame **3**
Flanges 3
Holes 3
Welding 4
Alterations 4
Shear Plate Attachments 4
Section 3 – Front Suspension **5**
Section 4 – Rear Suspension **5**
Section 5 – Brakes **5**
Section 6 – Engine **6**
Section 7 – Transmission **7**
Section 8 – Fuel and Exhaust **8**
Fuel Systems 8
Fuel Lines 8
Fuel Tank 9
Exhaust System 9
Section 9 – Steering **10**
Section 10 – Tires **11**
Section 12 – Electrical Battery and Battery Cables **11**
Accessory Power Supply Feed: 12
Section 13 – Cooling **13**

Chassis

General Arrangement – S/T 15506 14

General Arrangement – S/T 15806 15

Body

Exterior General Arrangement

Body Exterior – S/T 15506 16

Body Exterior – S/T 15506 17

Body Exterior – S/T 15806 18

Body Exterior – S/T 15806 19

Interior Seating

Interior Seating – S/T 15506 20

Interior Seating – S/T 15506 21

Interior Cargo Area – S/T 15506 22

Interior Cargo Area – S/T 15506 23

Interior Seating – S/T 15806 24

Interior Seating – S/T 15806 25

Interior Cargo Area – S/T 15806 26

Interior Cargo Area – S/T 15806 27

Frame

Rail and Crossmember Arrangement – S/T 15506 28

Rail and Crossmember Arrangement – S/T 15806 29

Spare Tire Carrier – S/T 15(5,8)06 30

Trailer Hitch – S/T 15(5,8)06 31

Axle / Suspension

Front Axle/Tire Data Chart – S 15(5,8)06 32

Front Axle/Tire Data Chart – T 15(5,8)06 33

Rear Axle/Tire Data Chart – S/T 15(5,8)06 34

Fuel Tank

Fuel Tank (18.7 gal. capacity) – S/T 15506 35

Fuel Tank (25.7 gal. capacity) – S/T 15806 36

Exhaust

4.2L Gas Engine Option – S/T 15506 37

4.2L Gas Engine Option – S/T 15806 38

5.3L Gas Engine Option – S/T 15806 39

BODY BUILDERS INSTRUCTIONS

The Incomplete Vehicle Document (IVD) is supplied with each incomplete vehicle, and provides information that should be used by intermediate and final stage manufacturers in determining conformity to applicable Federal Motor Vehicle Safety Standards (FMVSS). The IVD also includes information which must be followed in order to ensure that Environmental Protection Agency (EPA) and California emissions certification requirements and NHTSA Fuel Regulations are met.

The Body Builders Manual contains information that may be used in addition to the IVD for any manufacturer making alterations to a GM complete/incomplete vehicle. No alteration should be made to the incomplete and complete vehicle which either directly or indirectly results in any component, assembly or system being in nonconformance with any applicable Federal Motor Vehicle Safety Standard or Emission Regulation. Intermediate and final stage manufacturers should be familiar with all Federal Motor Vehicle Safety Standards and Emission Regulations and aware of their specific responsibilities as manufacturers.

For further assistance contact Upfitter Integration at: 1 (800) 875-4742, or go to our Web site at "**http://www.gmupfitter.com**."

Section 0 — General Instructions

Check for proper clearance between body members and chassis components which may in any way affect the reliability and performance of the vehicle by developing abrasion and wear points from moving parts or degradation from extreme environment or thermal exposure or may increase interior noise.

Check headlamp aim and all vehicle illumination systems for proper operation when the vehicle has been completed. Re-aim headlamps when necessary. Check for proper operation of windshield and rear window washer, wipers and defroster system.

Extreme care must be taken when working on vehicles equipped with Powertrain Control Module (PCM), Vehicle Control Module (VCM) or any electronic unit associated with an inflatable restraint system. (See Owner's Manual).

Prior to any welding, parts or components which could be damaged by excessive temperatures must be removed or adequately shielded; the battery cables should be disconnected at the battery.

If arc-welding is employed on the chassis or body, precautions must be taken to protect all vehicle components, especially brake, fuel lines and fuel tank assembly, electrical wiring and ECM/PCM/TCM, VCM and other modules. To avoid electronic component damage, disconnect battery (batteries); disconnect the negative cable first, followed by the positive. To reconnect cables; connect the positive first, then the negative.

(Section 0 — continued on next page)

(Section 0 — continued from previous page)

When welding components to the frame assembly, remove the wax coating in the area of the weld in order to obtain secure welds. After completion of the weld, a compatible corrosion protection should be applied to the affected weld areas.

All labels on the vehicle (any message applied to the vehicle or vehicle component that informs, instructs, or warns) must appear on the completed vehicle so the user can read them easily and without obstruction.

Service and service replacement parts for your add-on systems may not be available from a GM dealer. Those installing aftermarket systems should provide information as to where and how to obtain service.

Section 1 — Body

Body structures, interior and accessory arrangements must be designed into the vehicle to provide for proper load distribution on both axles and not to exceed any gross axle weight ratings. Lateral load equalization must also be maintained. The resultant Center of Gravity of the unladen vehicle must be within the limits tabulated in the FMVSS 105 section of the Incomplete Vehicle Document.

Hole drilling, welding, modifications or alterations to the body are the responsibility of the persons performing these operations. Those same individuals assume complete responsibility for body assembly reliability, performance after alterations and compliance to applicable FMVSS requirements.

Body insulation provided by General Motors should not be removed. This includes any thermal or underbody heat shields. This insulation is provided to protect the vehicle body and occupants from excessive heat and/or provide noise attenuation. Any replacement material internal to the occupant compartment must be certified for MVSS standard on flammability. Areas of specific concern, but not limited to, are:

- Underbody exhaust, muffler and tail pipe shields and insulators.
- Rear load floor interior insulation.
- Front floor interior insulation.
- Dash mat insulation.
- Engine cowl insulation – interior and exterior.
- Engine cover insulation.

If body builder installs seating other than that supplied with vehicle, it is the body builder's responsibility to ensure that the seating and restraint systems comply with FMVSS requirements. The restraint systems supplied with the vehicle were designed to accommodate the seating reference points and seat travel of the original equipment seats only.

(Section 0 — continued on next page)

(Section 0 — continued from previous page)

Air Conditioning

For additional information refer to ***Engine – Section 6.***

NOTE: Air conditioning systems using R-134A refrigerant are equipped with metric fittings to prevent interchange with R-12 refrigerant components. Do not interchange R-134A components, refrigerant oil or service equipment with R-12 components, refrigerant oil or service equipment.

Section 2 — Frame

Hole drilling, welding, modifications, or alterations to the frame assembly are the responsibility of persons performing these operations. These same individuals assume complete responsibility for frame assembly reliability, performance after alterations and compliance to applicable FMVSS requirements.

The following procedures and specific precautionary instructions are recommended for proper installation of special bodies and/or equipment on GM frames. Failure to follow these recommendations could result in serious damage to the basic vehicle.

Flanges

Do not drill holes in frame flanges.

Holes

Holes to mount brackets, supports, and out-riggers must be drilled in the vertical side rail web with the following restrictions:

- Material between edge of hole and inside of upper or lower flange must not be less than 37 mm (1.50 in.) for low carbon steel (36,000 PSI yield).
- The minimum edge distance between any two (2) holes must be larger than twice the diameter of the larger hole.
- No holes should exceed 20 mm (0.75 in.) in diameter.
- All holes should be drilled in the frame using appropriate drilling practice and safety precautions.

(Section 2 — continued on next page)

(Section 2 — continued from previous page)

Welding

CAUTION: Fuel tank and fuel lines must be drained and all vapors purged to ensure noncombustible mixture before any welding, brazing or soldering.

When welding low carbon steel side rails, crossmembers and brackets (32,000 or 36,000 PSI yield strength), emphasis is placed upon weld application techniques to avoid stress risers that may adversely affect frame operating stresses.

When welding is performed anywhere on the vehicle, precautionary measures should be taken to prevent damage to electrical system wiring or components. Prior to any welding, parts or components which could be damaged by excessive temperatures must be removed or adequately shielded; the battery cables should be disconnected at the battery. Also prior to welding, the area to be welded and surrounding area must be cleaned of all frame protective coating. After welding, when parts are cool, carefully inspect wiring and electrical components for shorts or other damage which could draw excessive currents and possibly cause an electrical system short when the battery is reconnected. Apply protective coating to areas where coating was removed.

Alterations

If the wheelbase is modified the alterer must take responsibility for compliance with affected motor vehicle safety standards and for warranty on items such as driveshafts, universal joints, center bearings and rear transmission tailshaft, transfer case and transmission case fractures, output shaft bushings, bearings, brakes, fuel systems and any other related component failures. Additionally, the customer must be alerted in the modifier's owner's manual that parts for the reworked area are not available through the General Motors service parts system.

Shear Plate Attachments

Attachments of shear plates should be accomplished by using existing manufacturing holes already available in the frame side rails. Manufacturing holes, normally 16 mm in diameter, are consistently placed along the frame side member in the center of the web on each frame.

When additional holes are required for shear plate attachment, they should be no larger than 20 mm (0.75 in.) in diameter. Holes are to be drilled no closer than 63.5 mm (2.5 in.) apart. For holes drilled forward of the rear axle, centers are to be no closer than 63.5 mm (2.5 in.) from the top or bottom flanges and no closer than 89 mm (3.5 in.) from any suspension attachments. For frame holes drilled rearward of the rear axle, hole centers are to be no closer than 51 mm (2.0 in.) from the top or bottom flange and no closer than 89 mm (3.5 in.) from suspension attachments.

No additional holes or notching of either top or bottom frame flanges is allowed.

Rear bodies or platforms added to the vehicle must utilize the released attachment points used by the pick-up box, along with fasteners of the same diameter. These are minimum requirements; additional fasteners are permissible.

Section 3 — Front Suspension

See chassis data information for clearances and assistance in calculating trim heights.

Since there is a large variation in completed vehicle front weight due to differences in body weight and equipment, the front suspension alignment must be checked and reset if necessary after the vehicle is completed. Caster and camber should be set with reference to the “A” dimensions.

See Truck Service Manual for complete alignment procedure, specifications and measurement of the “A” dimension under “Diagnosis and Front Alignment” section.

Section 4 — Rear Suspension

Clearance to body should be provided for the suspension, axle, driveshaft and tires under the following conditions: (1) Axle in full jounce against the metal-to-metal stop, (2) Axle at 4.5° roll with one side of axle in full jounce at the metal-to-metal stop and (3) Axle at design position. Allowance for the tire chain clearance shown on a maximum grown tire must allow for (1.66 in.) clearance to the sides of the tire and (2.5 in.) to the top of the tire. Be sure sufficient clearance is provided for suspension, axle and tire and wheel in full vertical travel (up and down).

NOTE: Notification to the consumer may be required in certain states if tire chains cannot be used.

Pipes, wiring, conduits and any other related components must not be placed where they cross the path of motion of the rear axle, driveshaft, axle brake pipes, hoses, spring or tires. Such crossing could result in rupture, wear through, or separation due to normal axle motion.

See chassis data information for additional clearances and for assistance in calculating trim heights.

Section 5 — Brakes

See Truck Service Manual for brake specifications.

Due to the critical nature of brake systems, anyone making modifications or alterations must assume complete responsibility for system reliability, performance and certification to FMVSS 105 or FMVSS 121.

It is mandatory that no change be made to the brake main cylinder location, brake pedal push rod length or pedal position.

(Section 5 — continued on next page)

(Section 5 — continued from previous page)

Ensure that hydraulic brake system is free of air and hydraulic leaks. Bleed brakes if required, following procedures as outlined in truck chassis service manual. Ensure that vacuum booster system or hydroboost system is functional and free of leaks.

Check master cylinder fluid level and fill as necessary. (Refer to Owner's Manual).

Check power steering fluid level for models equipped with hydroboost brake. (Refer to Owner's Manual).

Added floor covering or carpeting must not restrict service or parking brake pedal travel from released position to full pedal travel.

No body part or chassis-mounted component may be located within 2.0 in. of brake hose routing in all wheel and axle positions. All exhaust system components must also have a minimum of 2.0 in. clearance to brake hoses in closest positions. (Be sure to account for brake hose travel with suspension).

Body builder is to verify that the brake warning switch is operative. The brake warning switch on models equipped with vacuum-hydraulic brakes is located adjacent to the master cylinder vacuum unit. This includes both the brake system differential pressure and parking brake actuator switch.

Section 6 — Engine

For additional information refer to ***Body - Section 1.***

Air conditioning and auxiliary belt-driven equipment installation recommendations:

No alterations or additions to the accessory drive belt system will be warranted on serpentine belt systems.

The serpentine belt type of drive is designed as a total system, incorporating a single poly-V belt and an automatic tensioner. In this type of system, degrees of pulley wrap, belt tension, and pulley alignment are very critical factors. Modification is not recommended.

In some single belt serpentine systems, belt tension is determined by the automatic tensioner and its position relative to the belt. No adjustment is required.

Due to the critical nature of the accelerator system, anyone making modifications or alterations assumes complete responsibility for system reliability, performance and compliance to FMVSS 124.

(Section 6 — continued on next page)

(Section 6 — continued from previous page)

- Caution must be taken so that the accelerator pedal remains properly located. Guidelines for accelerator pedal locations are as follows:
  - Ensure that the accelerator can freely operate from idle to wide-open throttle position and return. Make sure that the pedal will not hang up on any nearby items such as carpets, floor, screws, wiring harnesses, etc. Engine cover should have at least one inch (25 mm) clearance to side of accelerator pedal with the carpet mat installed.
  - Accelerator to brake pedal relationship has been designed to provide minimum driver movement and should not be altered in any way.

Gasoline engine induction and/or ignition system is certified in compliance with the Federal Vehicle Emission Standards. Any alterations to the systems or components could void compliance and render the vehicle illegal. System includes:

- Fuel system – throttle body and port fuel injection (PFI) or sequential central port injector (SCPI) and associated tubes, hoses and pipes, air cleaner outside air hose, mass air flow sensor, fuel pump and inlet manifold, fuel vapor canister.
- Exhaust system.
- Ignition system distributor and initial spark timing setting, spark plugs, spark plug wires.
- Crankcase ventilation system.

Section 7 — Transmission

Models equipped with automatic transmissions have a steering column mounted or a transmission mounted neutral/park start safety mechanical lockout feature, which interfaces with the steering column ignition switch. Starter should operate only when gear shift lever is in neutral or park position. Readjust the shift linkage or neutral start backup switch if necessary as outlined in the Truck Service Manual.

Models equipped with manual transmission use a hydraulic clutch actuator. Check fluid level as outlined in the vehicle owner's manual.

It is mandatory that no change be made to the clutch master cylinder location, clutch master or slave cylinder push rod length, or pedal position.

Section 8 — Fuel and Exhaust

Fuel Systems

Due to the critical nature of sealing the fuel system, anyone making modifications or alterations to the existing system must assume complete responsibility for the system reliability, performance and compliance to FMVSS 301.

The fuel evaporative emission control equipment is certified to be in compliance with the Federal and California Vehicle Emission Standards. Any alterations to systems or components and their location could void compliance. System includes:

- Fuel tank, metering unit, lines including purge control solenoids and canister or canisters.

For these reasons, **NO ALTERATION OF THE FUEL SYSTEM IS RECOMMENDED.**

Fuel Lines

Fuel line routing precautions:

- 12 in. minimum clearance to exhaust system is required or a metal shield must be provided.
- Fuel lines should be clipped to chassis to prevent chafing. Metal clips must have rubber or plastic liners.
- Use corrosion resistant steel tubing with short sections of approved hose to connect components. Hose-to-tube connections should be clamped for diesel systems. Steel tube ends should be beaded for hose retention. Fuel supply is pressurized by an in-tank pump for PFI and SCPI systems. Coupled hose or nylon quick-connects must be used. Clamped hose is not acceptable for PFI and SCPI systems.

All engines require a fuel return system which returns excess fuel from the injection pump and injector nozzles back to fuel tanks. Care should be taken that these lines are not blocked nor their hoses pinched. The engine may run poorly or stall if these lines are restricted or blocked.

All gasoline engine vehicles are equipped with fuel evaporative emission control equipment which is certified to be in compliance with the Federal or applicable California vehicle emission standards. Alterations to fuel tank and metering unit, lines, canister or canisters, canister filters, canister purge control valves, relay switches, tank auxiliary vent valve, engine speed controller, or other devices/systems are therefore not allowable since vehicle adherence to C.A.R.B. and Federal regulations may be affected.

Diesel powered vehicles incorporate water drain provisions in the fuel system. These valves are only to be opened when siphoning water and contaminants from the fuel system.

(Section 8 — continued on next page)

(Section 8 — continued from previous page)

Fuel Tank

For vehicles with full frames, the tank must have a minimum clearance of 2 in. top, front, rear and sides to body and other supports.

Tank may be pressurized to 1.25 PSI maximum to check for final line leakage or for forcing fuel through the system. Pressures greater than this amount may be detrimental and affect tank durability.

The use of auxiliary fuel tanks is not recommended. If an auxiliary fuel tank is added, the alterer must take responsibility for compliance with affected motor vehicle safety standards. Also, if an auxiliary fuel tank is added to a gasoline-powered vehicle, the fuel must be drawn through a pipe at the top of the tank (balance line between tanks is not permitted).

Gasoline fueled vehicles are now equipped with a fuel pump return line. If an auxiliary tank is added, the tank selector valve must include a return port which returns fuel to the tank from which the fuel is being drawn.

In gasoline engines the fuel pump is located in the fuel tank. The battery must be disconnected before starting any work on the fuel system.

In the use of dual fuel systems, the vehicle operator should strictly adhere to the manufacturer's procedures for switching from gasoline to gaseous fuel operation. Improper switching procedures may result in overheating and damage to the exhaust system and the vehicle. The gaseous fuel tank should not be mounted in an enclosed area of the vehicle, such as the passenger compartment, trunk, etc., and the system should be vented to the outside of the vehicle. In addition, vehicles converted to gaseous fuels should not be stored in enclosed places such as garages. Further, General Motors cautions purchasers that the design, location and installation of any type of fuel storage system involves significant technical and engineering considerations and that these statements on gaseous fuel conversions should not be interpreted to be an approval by General Motors of any modification to the original equipment fuel system.

Conversions to gaseous fuel should be made in conformance with applicable Federal and State regulations. Removal of emission-control components, or the addition of gaseous fuel systems which could damage or reduce the longevity of those components and could also cause the mechanical and emission performance warranty to be voided.

Exhaust System

Particular care should be taken to prevent the possibility of exhaust fumes and carbon monoxide exposure to vehicle occupants in units completed by body builders. Holes and openings through the floor and all other parts of the body must be permanently and adequately sealed by the body builder to avoid exhaust intrusion into any occupant area. If it is necessary to change the exhaust outlet location, the exhaust discharge must be unobstructed and directed away from occupant areas. Alteration of the exhaust outlet or its position may increase exhaust noise and render the vehicle illegal in those areas with pass-by noise regulations. All vehicles > 10,000 lbs. GVWR come under Federal noise regulations, vehicles: ≤ 10,000 lbs. GVWR are regulated by various state and local regulations of the Environmental Protection Agency; see those regulations for rules, test procedure and noise levels permitted.

(Section 8 — continued on next page)

(Section 8 — continued from previous page)

Tail pipe outlet location must be tested statically and with the vehicle in motion to ensure that exhaust gases do not penetrate side or rear windows or underbody seams and holes. Auxiliary power plants should also be tested under the same conditions. Tail pipe exit ahead of rear wheels is not recommended.

Check for leaks in exhaust systems and repair as required.

Any exhaust joint which has been disassembled must have the exhaust gasket replaced and the fasteners torqued to specifications. Re-check exhaust system for leaks.

Exhaust temperatures can exceed 1600ºF under extreme operating conditions, with pipe surface temperatures slightly less than this. Extreme care must be used when placing body components in the proximity of the exhaust system so as not to exceed the rated temperature limits of the components. Due to variants in underbody configurations of the vehicles, we are not in a position to make recommendations on how to insulate or design components in the proximity of the exhaust system.

Each manufacturer must make temperature checks of critical areas of his vehicle and adjust his design accordingly, or provide shielding to ensure safe operation of his body components.

The same can be said for the engine compartment. Obviously there will be additional heat radiated from the engine. How much is retained in the area will depend on how well this area is ventilated in your individual designs. Here again, temperature checks of interior areas surrounding the engine should be made to determine if your insulation is adequate. This is the same engineering practice we have followed on our complete vehicles incorporating these exhaust systems.

Exhaust system materials are selected and tested to withstand the operating environment of the vehicle. ***Do not modify the exhaust system in any way.*** The tail pipes are made of 409 aluminized stainless steel.

Heatshields are mounted to the underbody and/or exhaust system components (catalytic converter, muffler and tail pipe). Shields for the propshaft hanger bearings are also provided in some vehicles.

Section 9 — Steering

Check power steering fluid level and system operations. (Refer to Owner's Manual).

The power steering hydraulic system should not be used to drive any other accessories.

Steering wheel and horn pad must not be altered or replaced.

The steering column mast jacket or electrical wiring must not be altered.

Section 10 — Tires

Check wheel lug nuts for proper torque; specifications are provided in the Owner's Manual.

Substitution of tires of greater capacity than those offered as original equipment by vehicle manufacturer is not approved for use on original equipment wheels. Any usage of higher capacity tires must be accompanied by higher capacity wheels. However, the wheel offset and distance from centerline of rim to wheel mounting face must be the same as the replaced original equipment wheel to ensure proper wheel bearing loading and clearance of tires to body and chassis components.

Increasing tire and wheel capacity does not necessarily increase vehicle GVW ratings. It is recommended that tire chain clearance guideline, J683, from the Society of Automotive Engineers be adhered to in designing rear wheelhouse clearance.

Check tires and inflate to recommended tire pressure according to the tire pressure information provided in Owner's Manual and tire inflation label provided with vehicle.

Any substitution of tires may affect Speedometer/Odometer accuracy.

Section 12 — Electrical Battery and Battery Cables

The vehicle battery should be located and positioned to make use of the existing battery cables. If the battery requires relocation and longer cables are required, a proportionately larger gauge wire must be used. If in relocating the battery the negative ground cable is attached to frame rail, a cable of similar gauge be provided between the frame rail and the engine. This is required due to the heavy electrical loads imposed by the starting circuit. To ensure proper operation of the battery cables the following chart on length, gauge and materials must be strictly adhered to:

Combined length of positive and negative	
Cable Gauge	**Cable in Inches (Copper)**
4	66
2	107
0	170

If the battery is remotely mounted (other than in the engine compartment) the 'sense' circuit in the generator regulator shall be used. The sense circuit consists of a 7.76 OHM 1/4 watt resistor connected in series between the 'S' terminal of the generator and the B+ terminal of the battery.

(Section 12 — continued on next page)

(Section 12 — continued from previous page)

Modifications/add-on wiring must be carefully reviewed to ensure compatibility with the base vehicle wiring by reviewing system schematics, wire routing paths, harness connections, etc. Due to the wide range of modifications that may be required for vocational needs, it is not feasible for the O.E.M. to take into account all potential revisions. For this reason, any person modifying existing vehicle wiring must assume responsibility that the revisions have not degraded the electrical system performance. Any add-on wiring must be properly fused and routed to prevent cut, pinch, and chafe problems, as well as avoid exposure to excessive heat. Care must be exercised that existing vehicle interfaces do not have their current load capabilities exceeded, and that the respective control devices are not overloaded. Added wire size should be at least as large as the wire to which it is attaching in order for fuse protection to be maintained.

A Packard electric wiring repair kit is available through Kent-Moore (GM P/N 12085264, Kent-Moore P/N J38125-4). This kit contains instructions, tools and components for making repairs to wiring harness components. This kit would also greatly assist in accomplishing necessary add-on wiring such as body marker lamps, so that system reliability/durability is maintained.

Electrical wiring components can be obtained through your authorized GM dealer. Many Packard Electric components are also available through Pioneer Standard Company (1 800-PACKARD). Pioneer may also be able to assist in making necessary wiring additions by providing custom wiring stubs or jumpers to your specifications.

Fusible Link Repair Procedure:

1. Cut damaged fusible link from wiring harness assembly splice.
2. Strip insulation from harness wire as required to splice on new fusible link.
3. Fabricate a new fusible link wire approximately 6 to 8 in. long from the same wire size as the original link. (Acceptable fusible link material will be imprinted with the wire size and the wording to identify it as fusible link. Fusible link cable is not the same as normal vehicle wiring.)
4. Terminate fusible link harness wire with a suitable compression splice clip, and solder with an electrical grade rosin core solder. Wrap splice area with tape to provide electrical insulation, as well as mechanical strain relief at the splice.
5. Strip, terminate, solder, and insulate remaining end of fusible link with appropriate termination to be compatible with the rest of the electrical system.
6. For further information, refer to the instruction manual in the wiring repair kit referenced elsewhere in this section.

Accessory Power Supply Feed:

For power requirements to service additional devices to be added by body builder/upfitter, the power supply source must be at the junction block stud.

(Section 12 — continued on next page)

(Section 12 — continued from previous page)

NOTE: Use the supplied nut or connection part.

Underhood electrical stud is protected with 125 (AMP) fuse. All accessories should be protected with an appropriate fuse.

Section 13 — Cooling

To provide satisfactory engine cooling, the following conditions must be met:

1. Do not locate any large objects in front of the radiator core or grille such as batteries, spare tires, lights/sirens, etc. They restrict air flow into the radiator core and influence fan blade stress.
2. Grille opening, size configuration and the external baffles provided should not be altered in any manner. Any reduction in cooling ability may adversely affect engine/transmission performance.
3. Fan clutches not conforming to the original equipment specifications may not operate correctly and may stay “on” continuously, never come on, or cycle on and off excessively. This will result in a reduction of fuel economy, engine overheat at times, and annoying cycling respectively.

   NOTE: These vehicles are equipped with an electronic controlled fan drive. No after-market fan drive is compatible with the vehicles electronics and sensors.
4. The rear heater unit must have a vacuum solenoid control valve to control the cooling flow.
5. Use GM 6277M Long Life Coolant only.

S/T 15506 General Arrangement

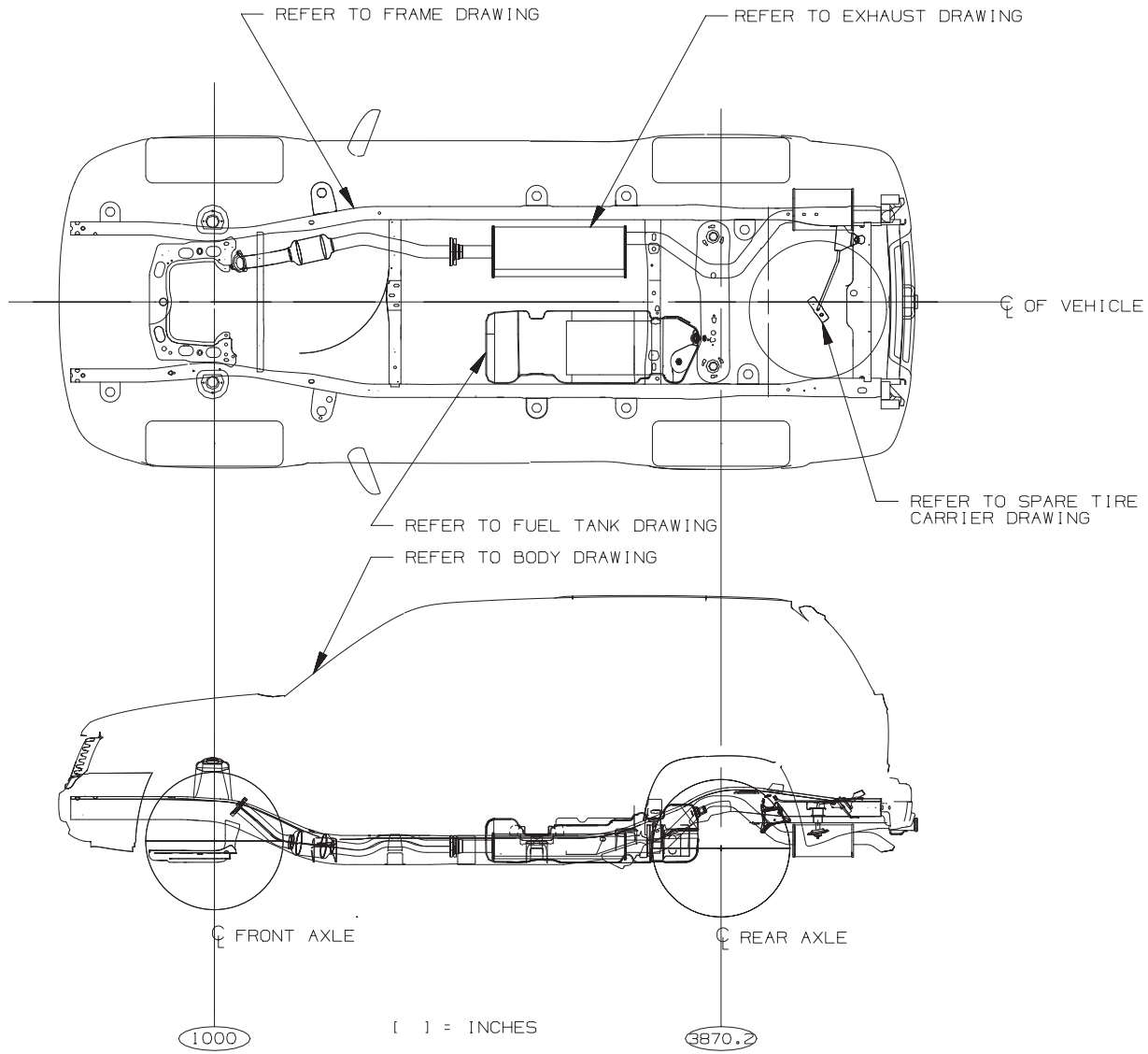

TD005775

S/T 15806 General Arrangement

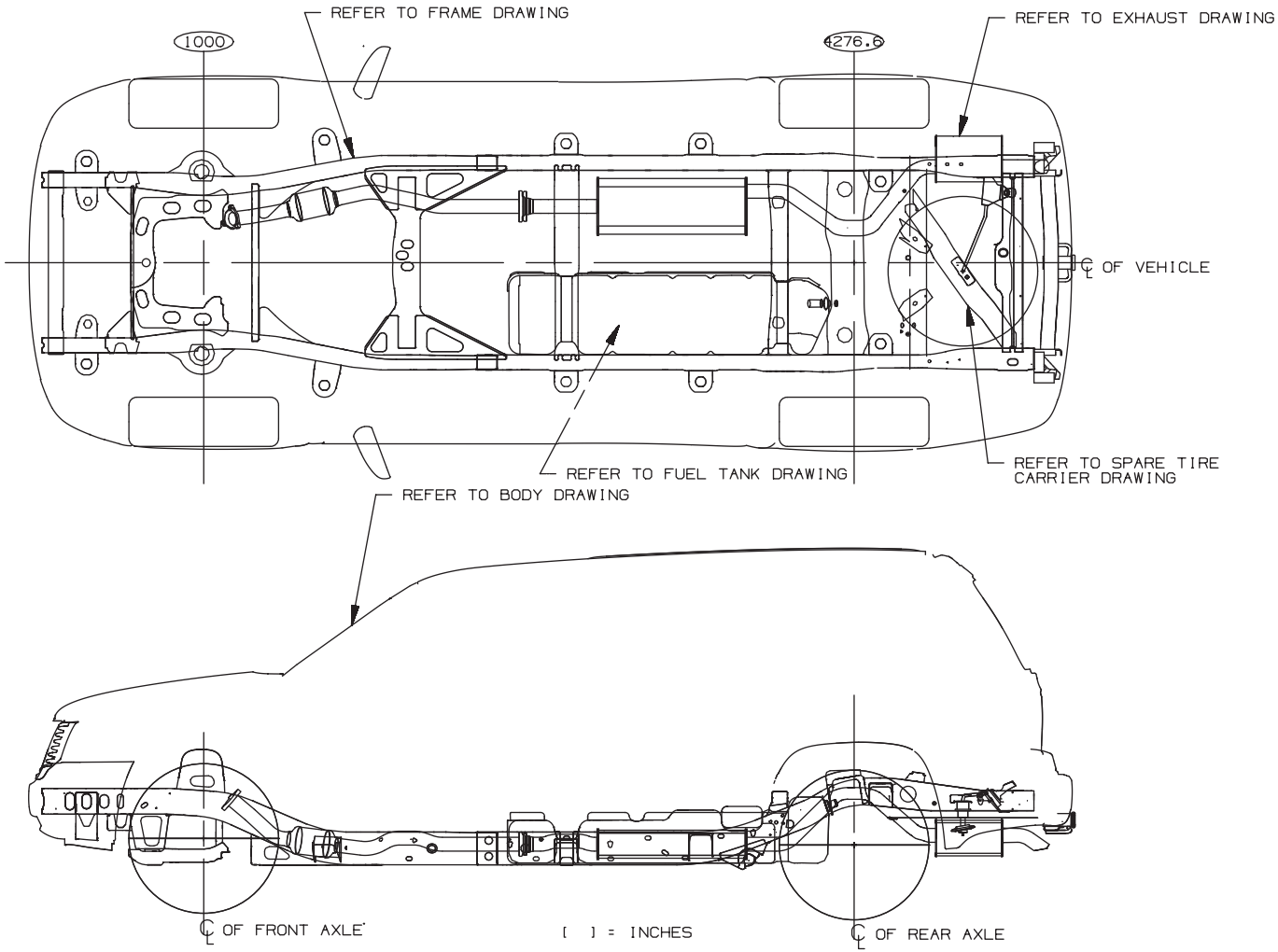

TD005802

S/T 15506 Body Exterior

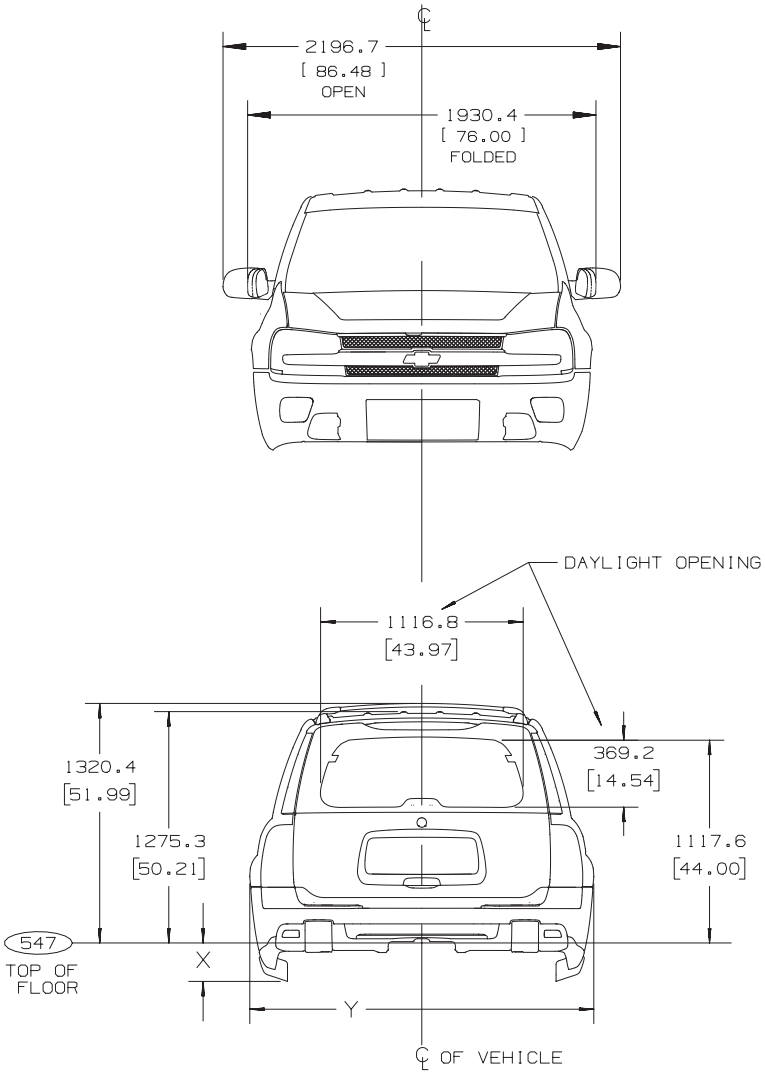

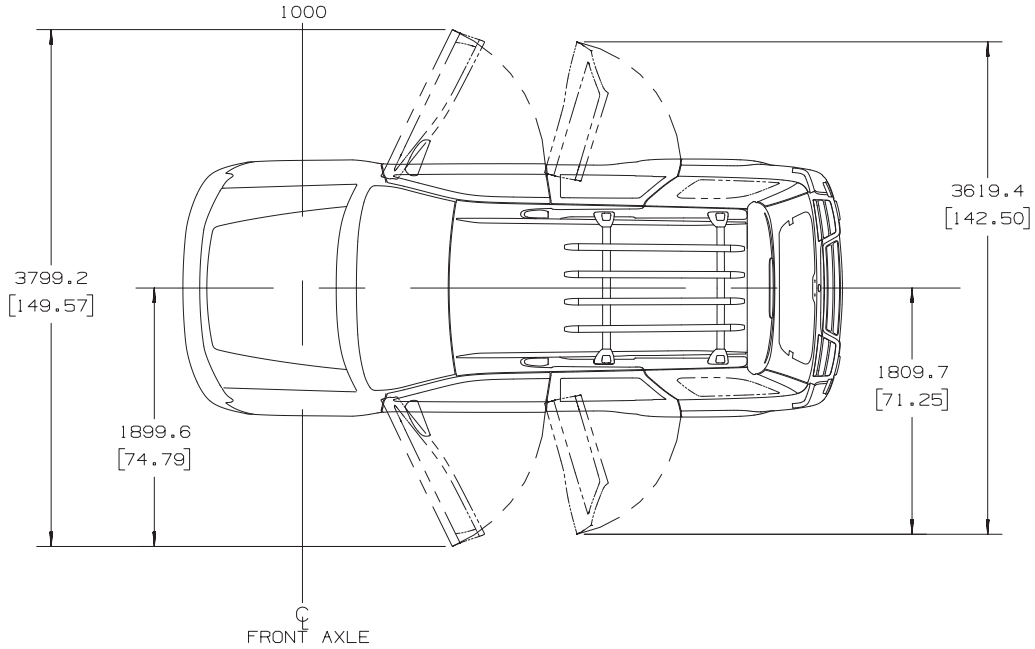

RPO	DIM X	DIM Y
X88 (CHEVY)	212.1 [8.35]	1896.4 [74.66]
Z88 (GMC)	192.5 [7.58]	1896.3 [74.66]
Z70 (OLDS)	181.9 [7.16]	1917.3 [75.48]

X88-CHEVY SHOWN

[ ]=INCHES

TD005776a

S/T 15506 Body Exterior

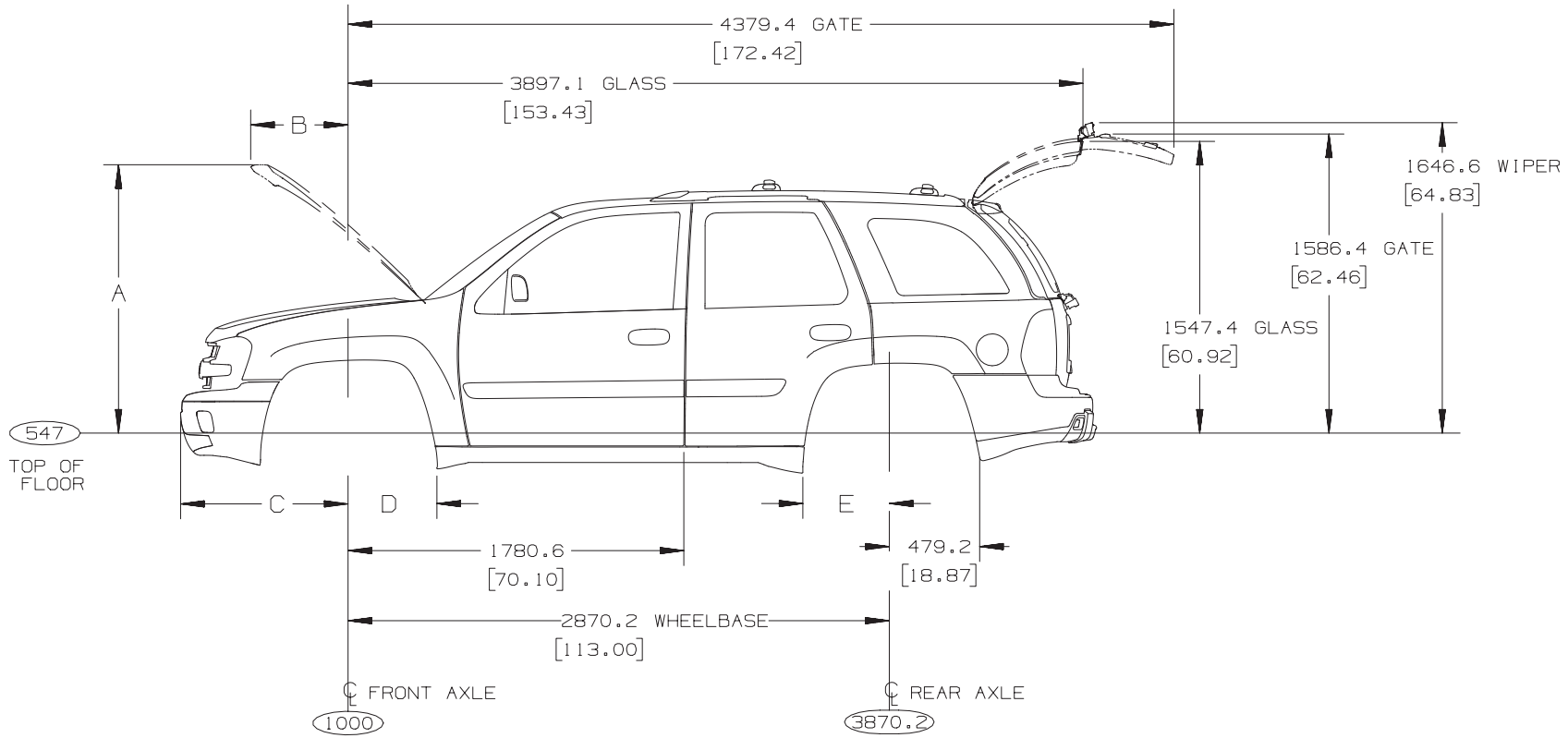

RPO	DIM A	DIM B	DIM C	DIM D	DIM E
X88 (CHEVY)	1423.5 [56.05]	516.3 [20.33]	887.9 [34.96]	471.3 [18.55]	458.5 [18.05]
Z88 (GMC)	1423.4 [56.04]	526.6 [20.73]	882.1 [34.73]	459.9 [18.10]	462.8 [18.22]
Z70 (OLDS)	1435.5 [56.52]	551.7 [21.72]	886.4 [34.90]	454.1 [17.88]	461.6 [18.17]

X88-CHEVY SHOWN

[ ]=INCHES

TD005776b

S/T 15806 Body Exterior

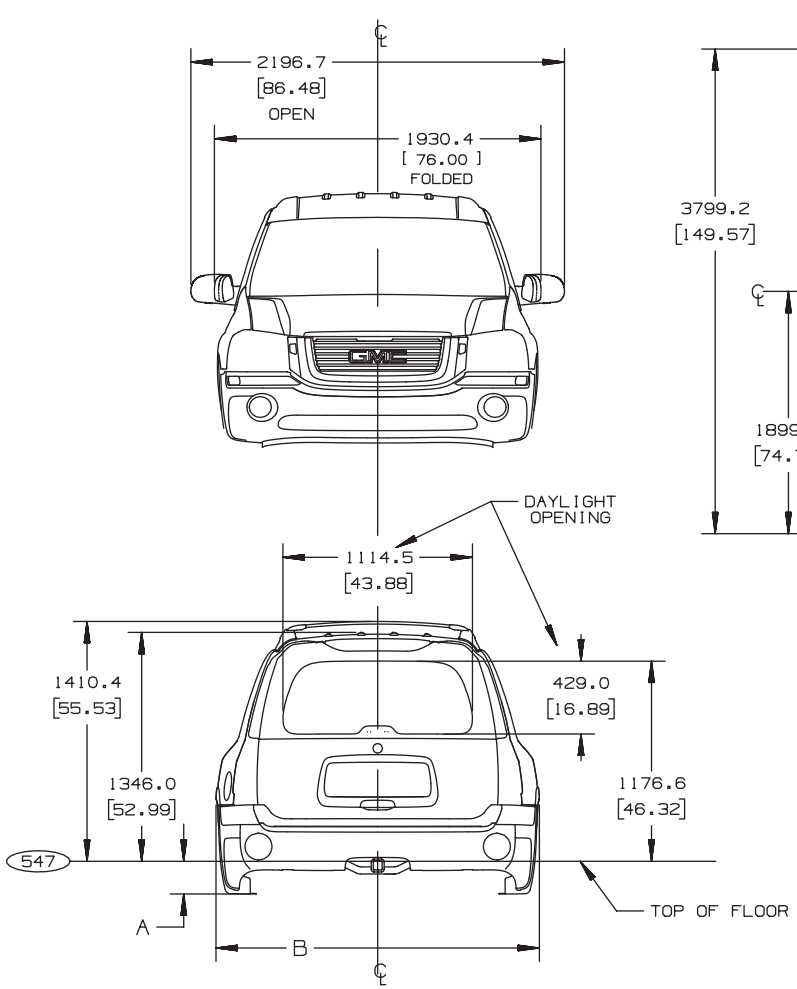

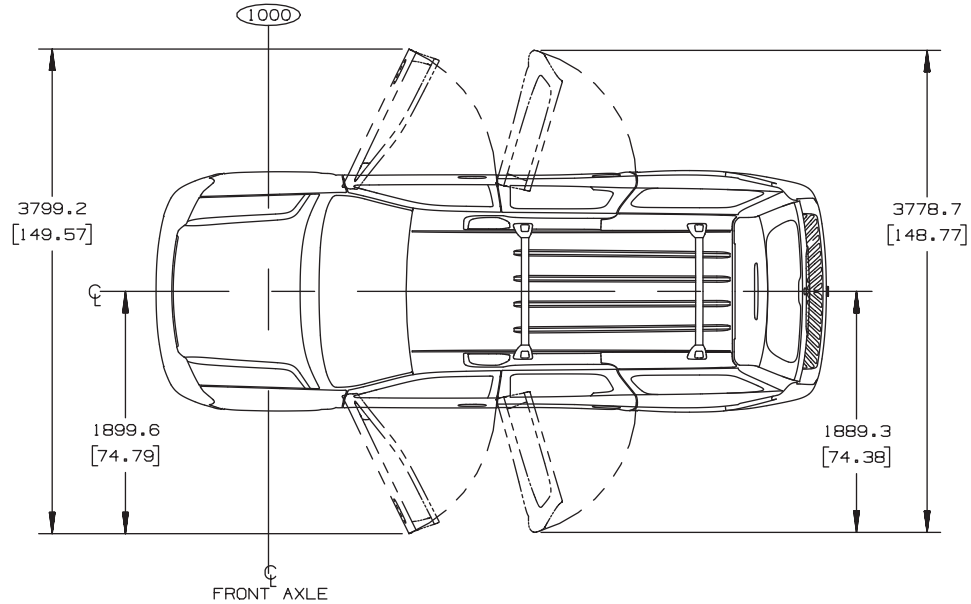

RPO	DIM A	DIM B
Z-88 GMC	192.1 [7.56]	1901.4 [74.86]
X-88 CHEVY	202.5 [7.97]	1897.5 [74.70]

Z-88 GMC SHOWN

[ ]= INCHES

TD005777a

S/T 15806 Body Exterior

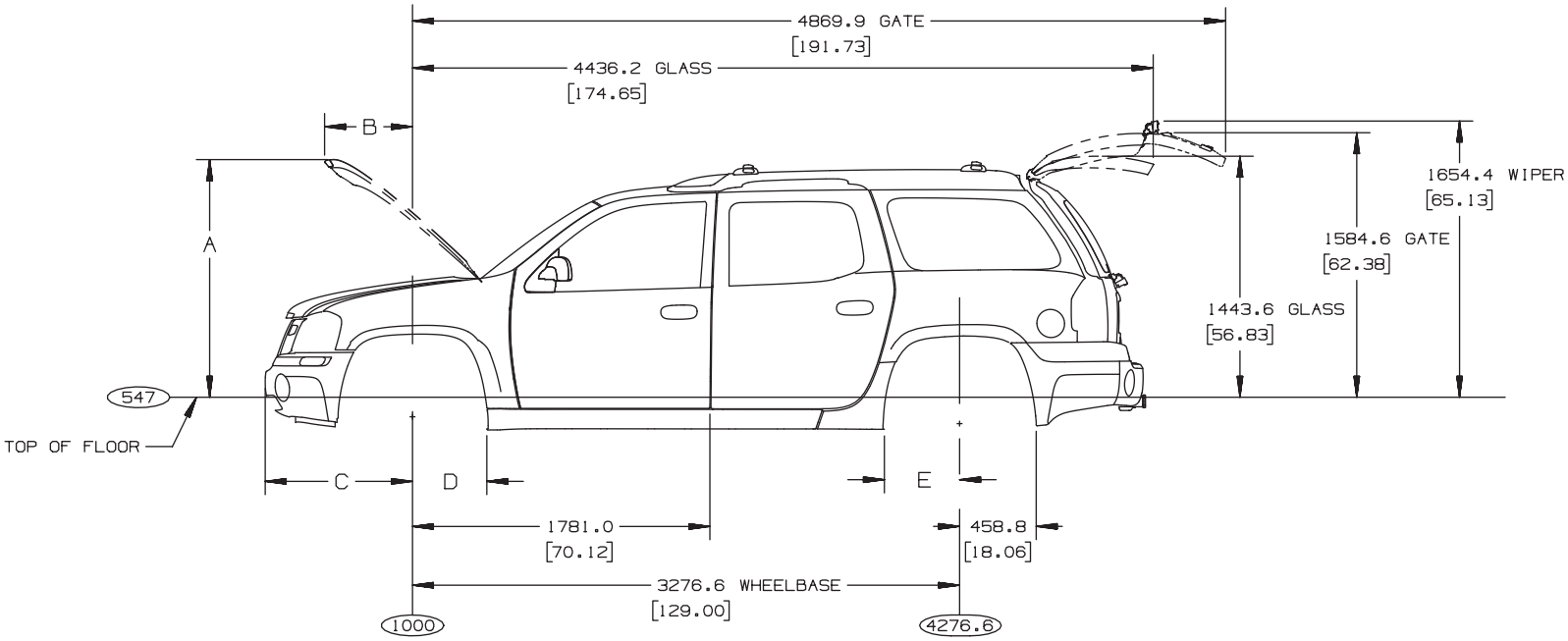

[ ]= INCHES

RPO	DIM A	DIM B	DIM C	DIM D	DIM E
Z-88 GMC	1423.4 [56.04]	526.6 [20.73]	882.1 [34.73]	445.1 [17.52]	450.5 [17.74]
X-88 CHEVY	1423.5 [56.05]	516.3 [20.33]	887.9 [34.96]	471.0 [18.54]	452.4 [17.81]

Z-88 GMC SHOWN

TD005777b

S/T 15506 Interior Seating

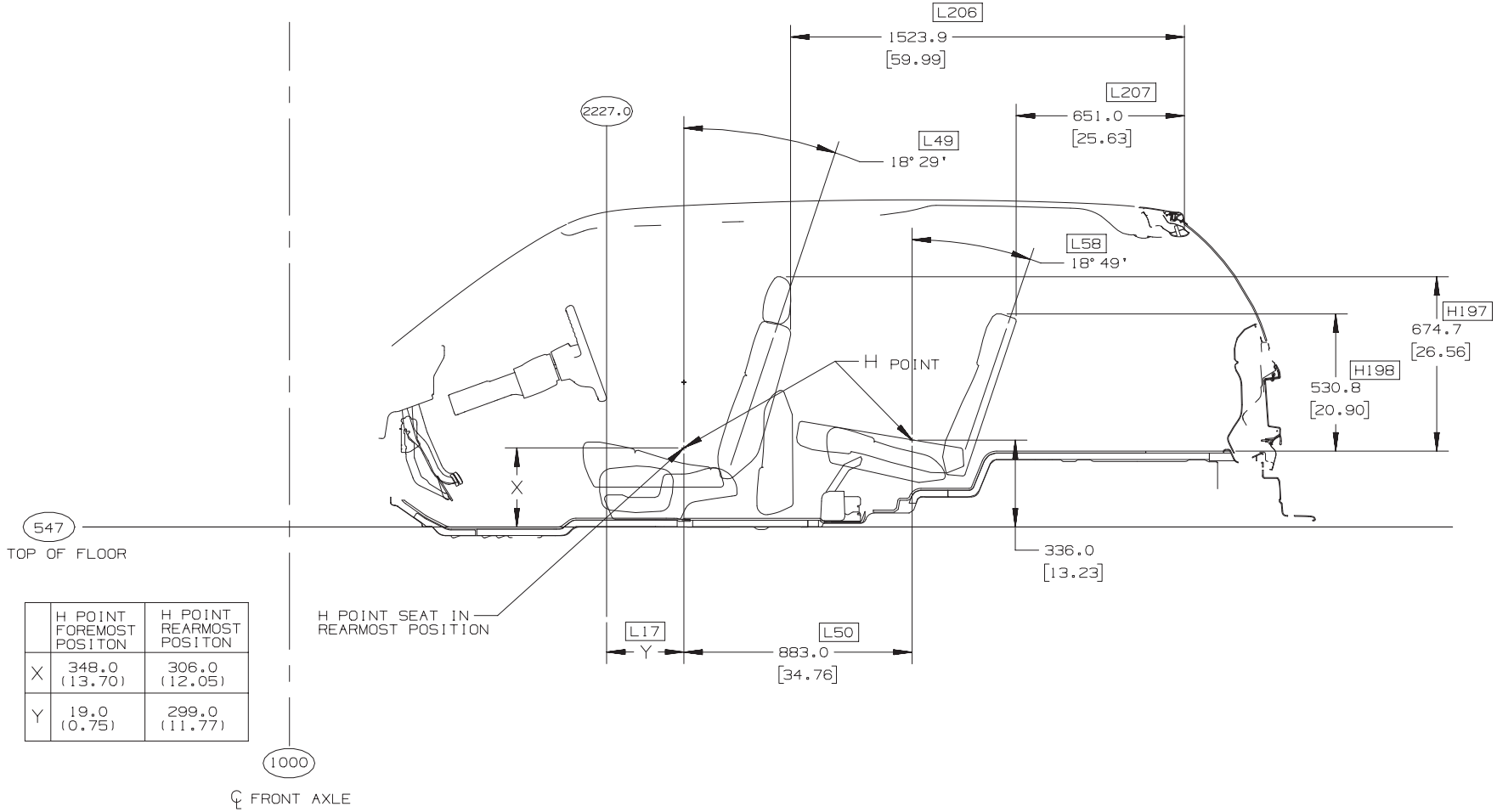

	H POINT FOREMOST POSITON	H POINT REARMOST POSITON
X	348.0 (13.70)	306.0 (12.05)
Y	19.0 (0.75)	299.0 (11.77)

[ ] INCHES

TD005778d

S/T 15506 Interior Seating

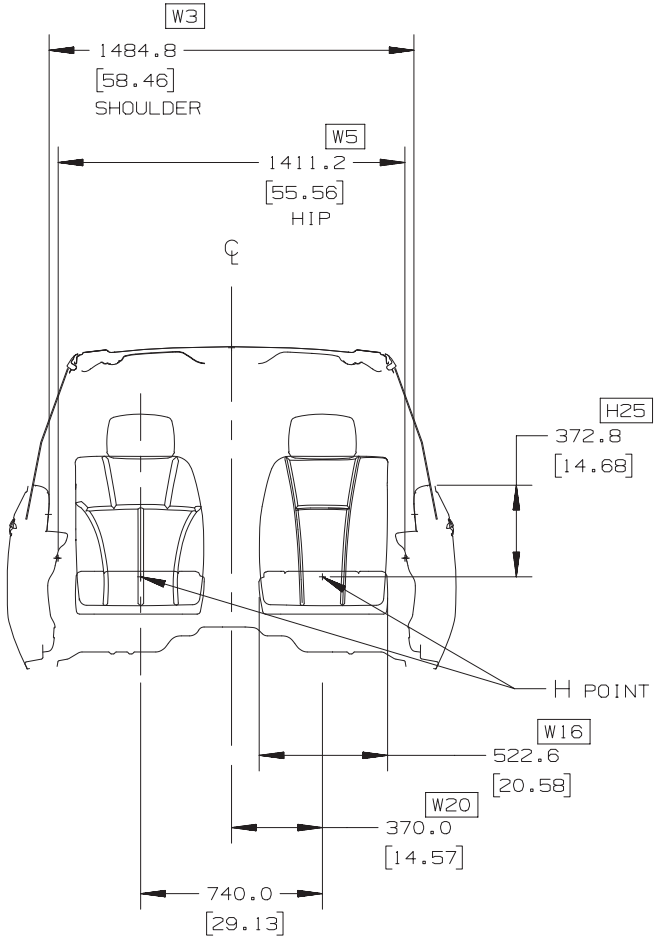

FRONT VIEW
OF FRONT SEAT

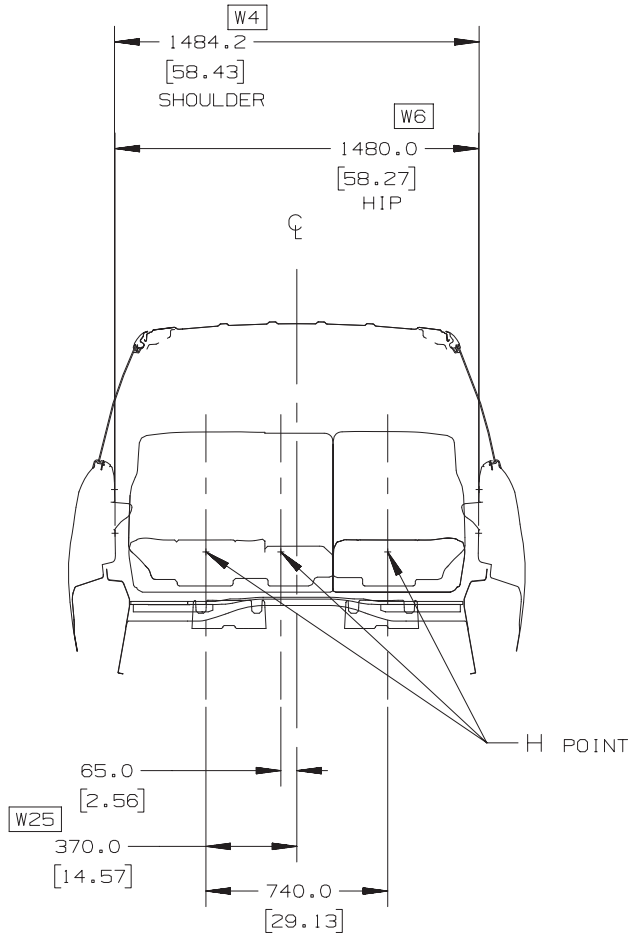

REAR VIEW
OF REAR SEAT

[ ] INCHES

TD005778e

S/T 15506 Interior Cargo Area

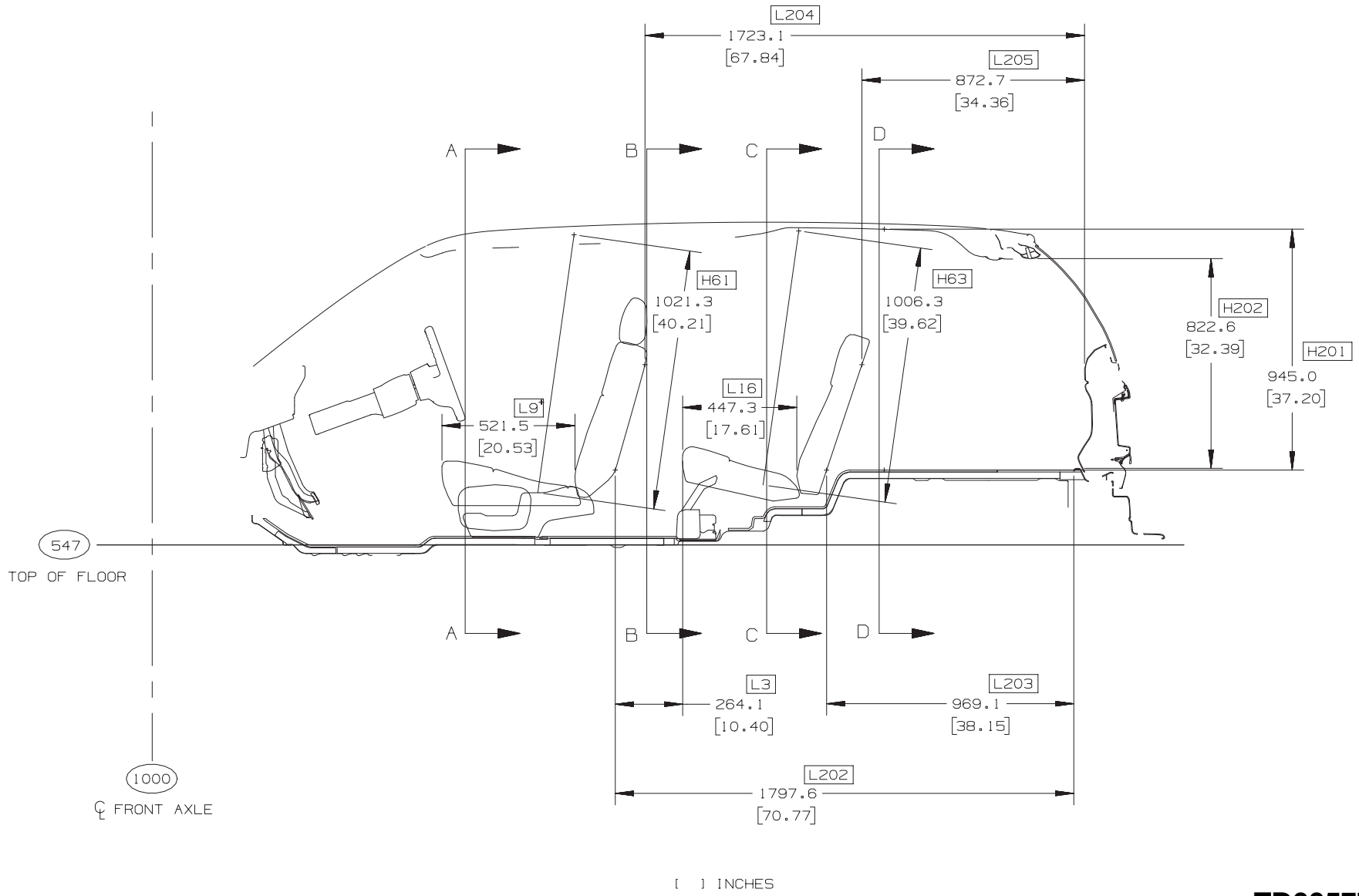

TD005778a

S/T 15506 Interior Cargo Area

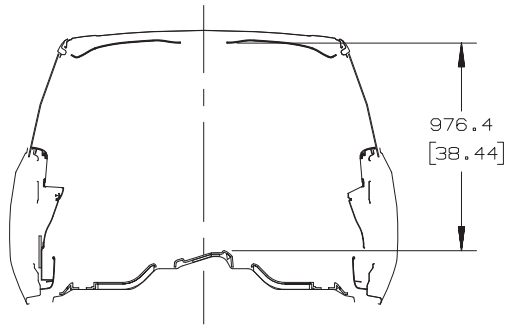

SECTION A-A
2227.0

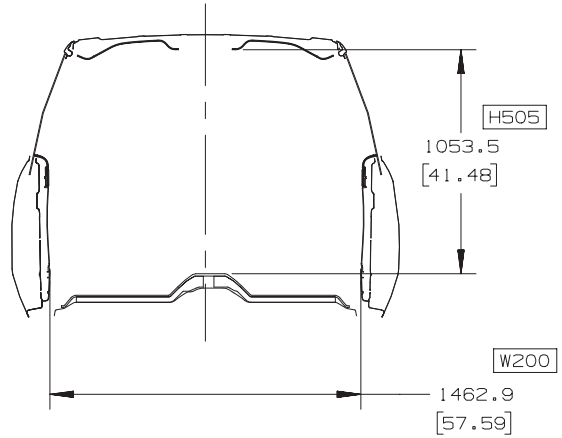

SECTION B-B
2939.0

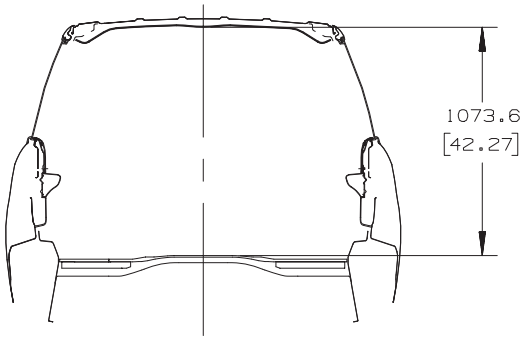

SECTION C-C
3409.0

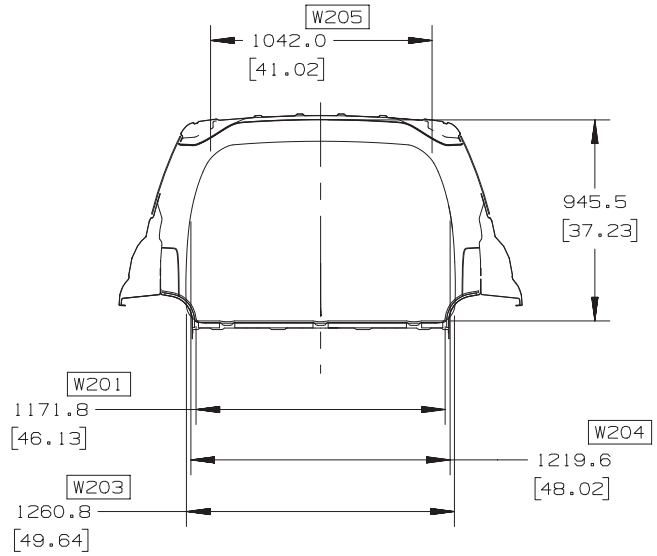

SECTION D-D
3850.0

[ ] INCHES

TD005778c

S/T 15806 Interior Seating

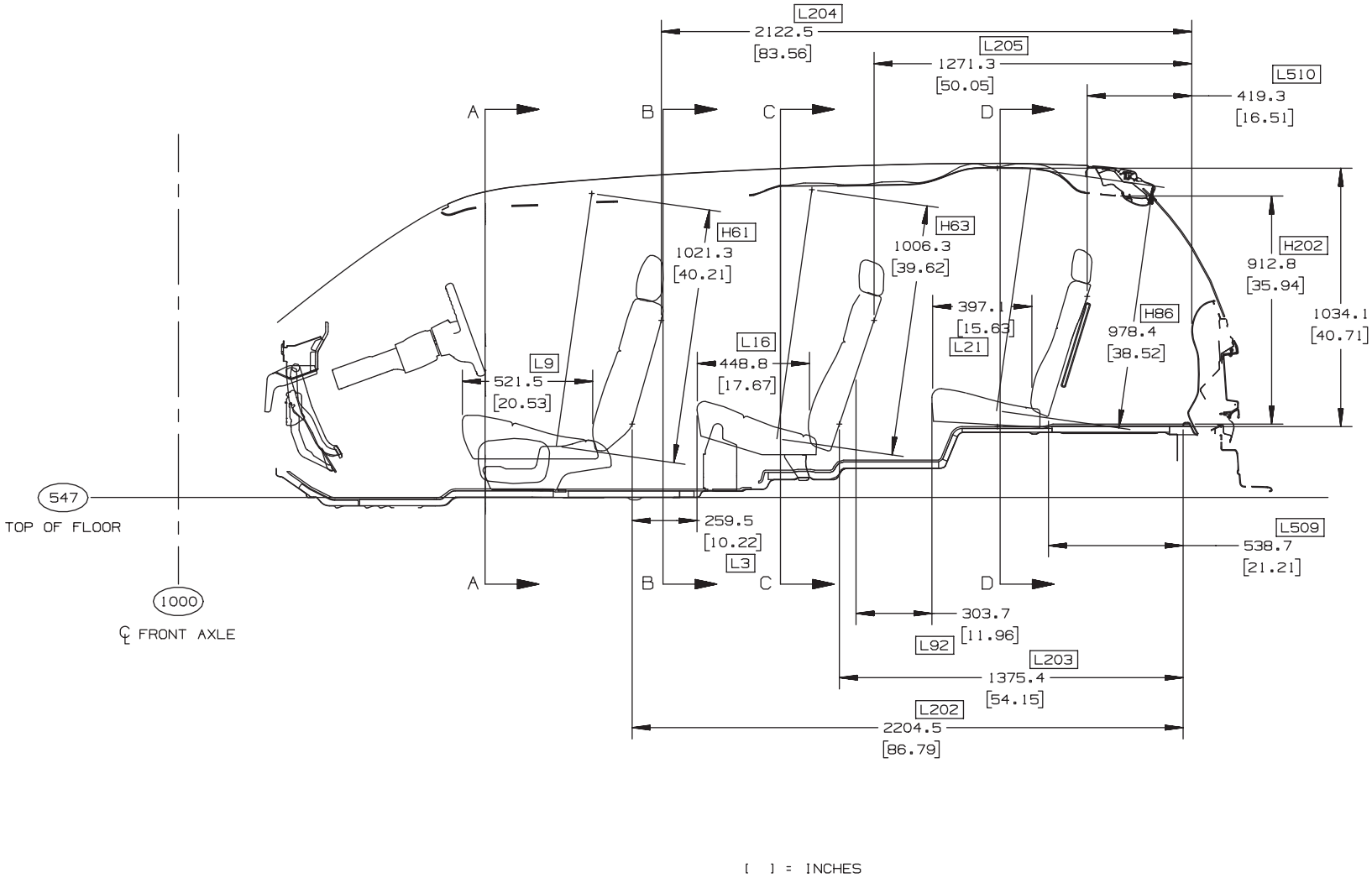

TD005833a

S/T 15806 Interior Seating

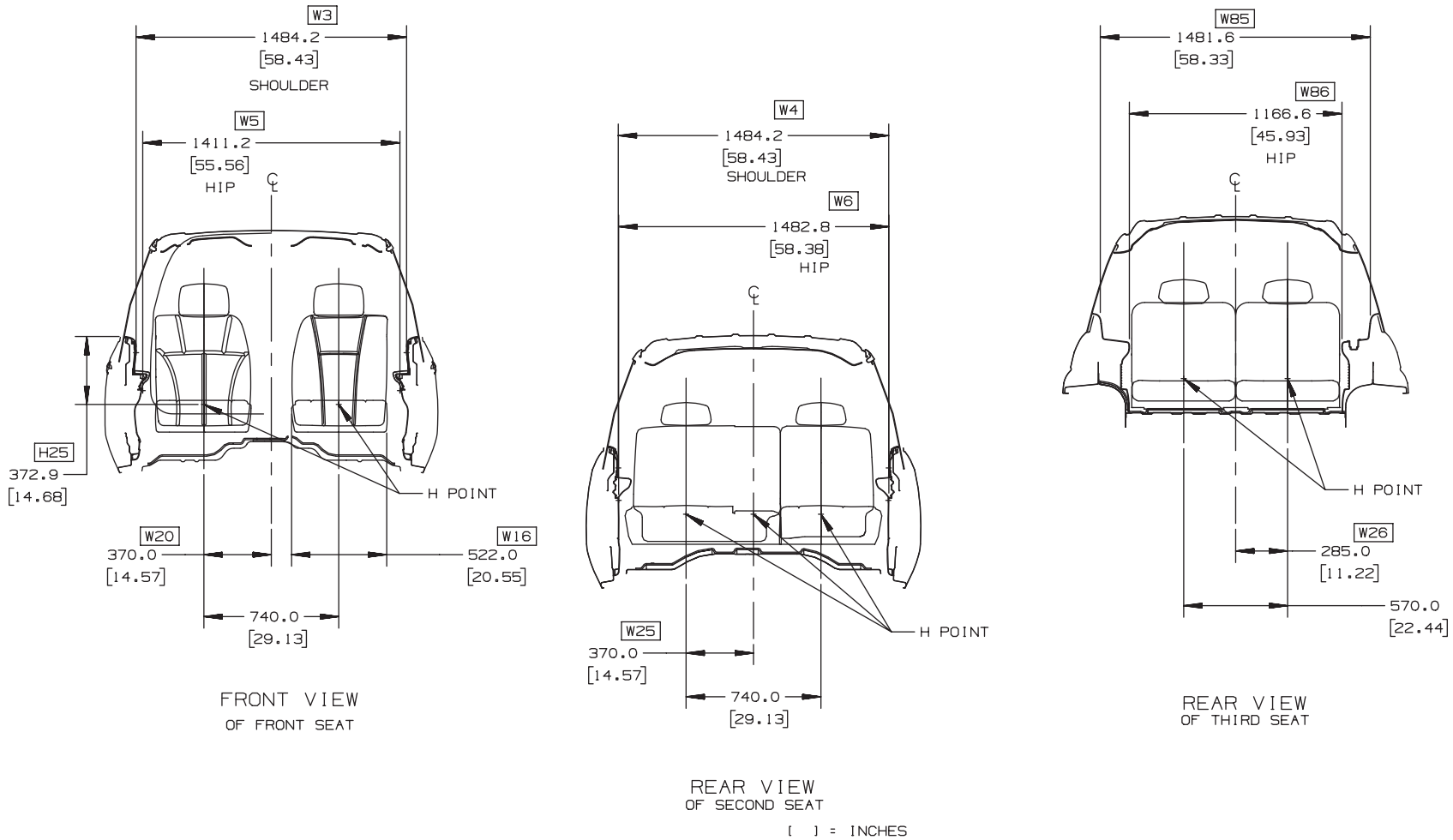

TD005833e

S/T 15806 Interior Cargo Area

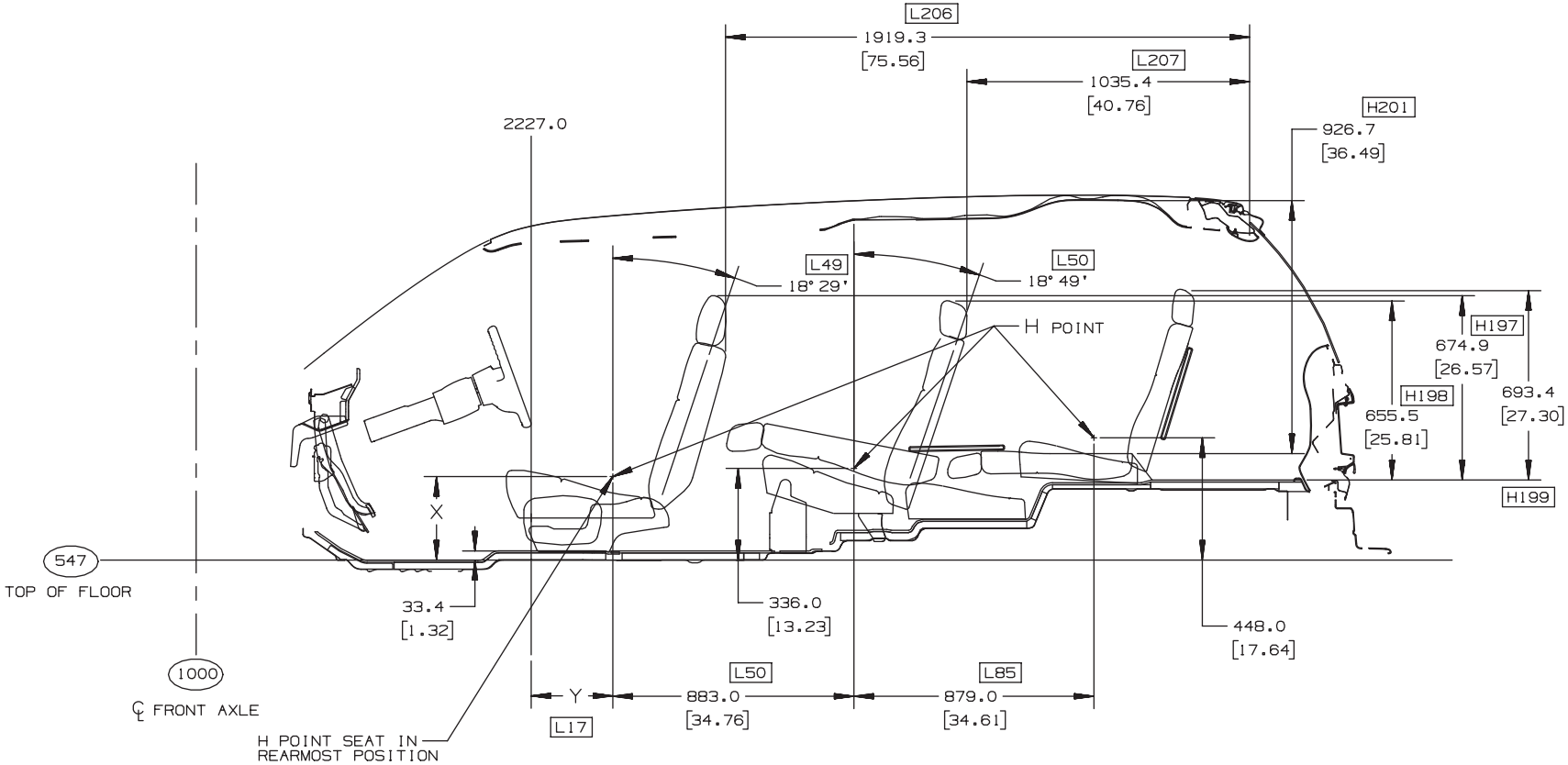

	H POINT FOREMOST POSITION	H POINT REARMOST POSITION
X	348.0 (13.70)	306.0 (12.05)
Y	19.0 (0.75)	299.0 (11.77)

[ ] = INCHES

TD005833d

S/T 15806 Interior Cargo Area

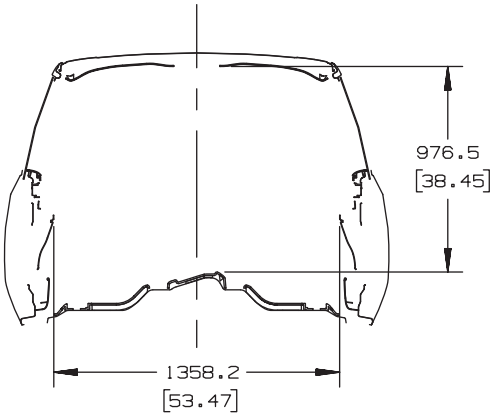

SECTION A - A
2227.0

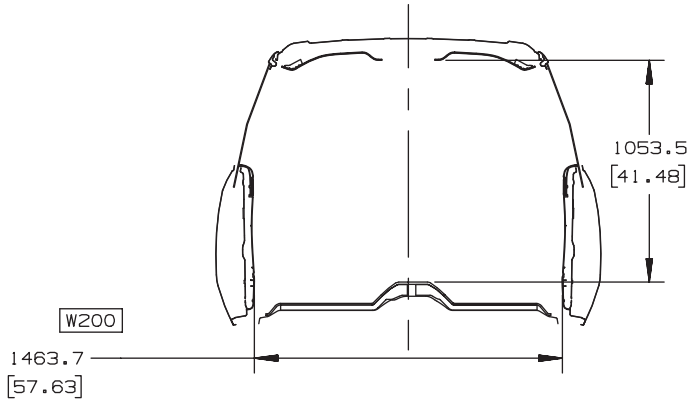

SECTION B - B
2939.0

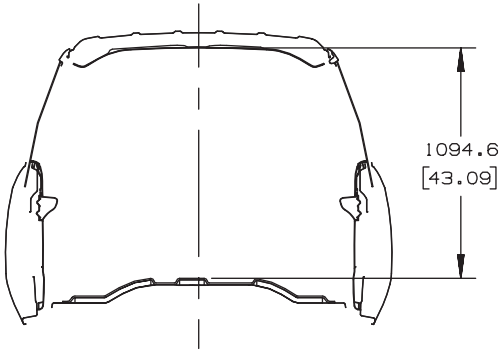

SECTION C - C
3409.0

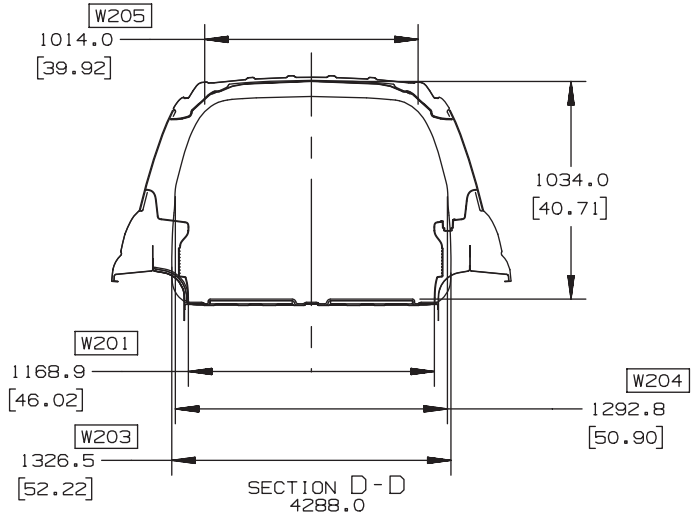

SECTION D - D
4288.0

[ ] = INCHES

TD005833c

S/T 15506 Rail and Crossmember Arrangement

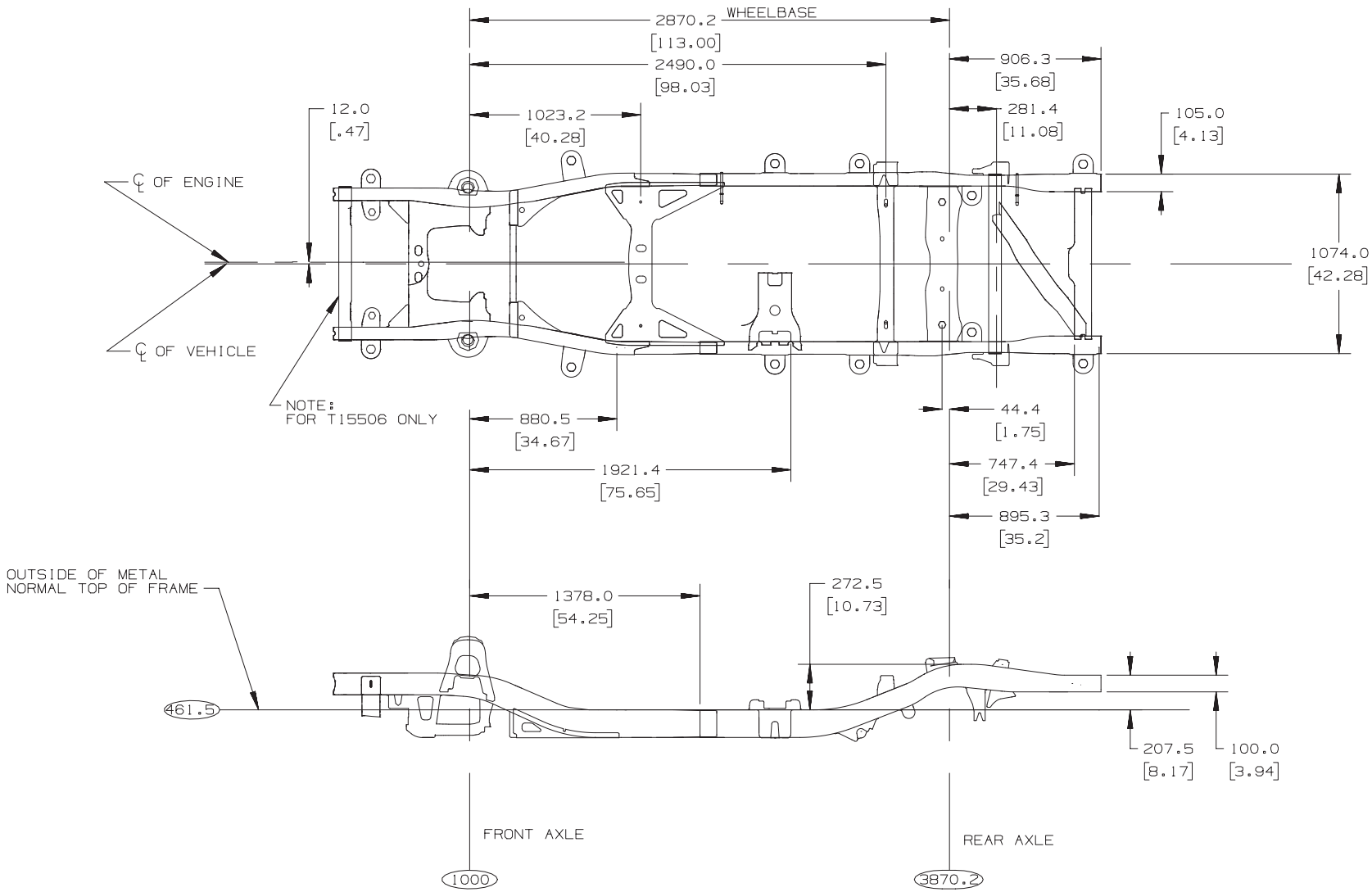

TD005800

S/T 15806 Rail and Crossmember Arrangement

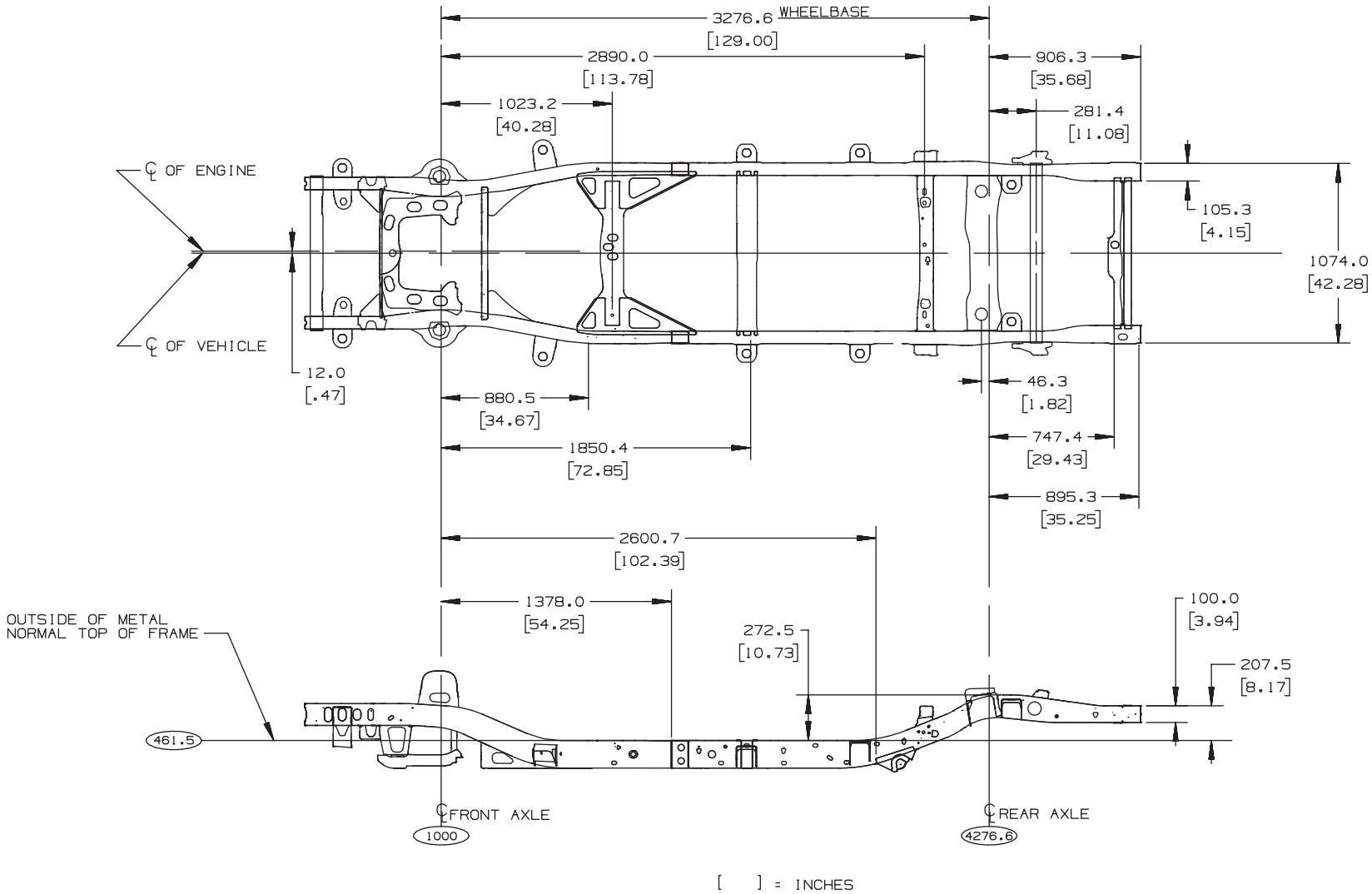

TD005806

S/T 15(5,8)06 Spare Tire Carrier

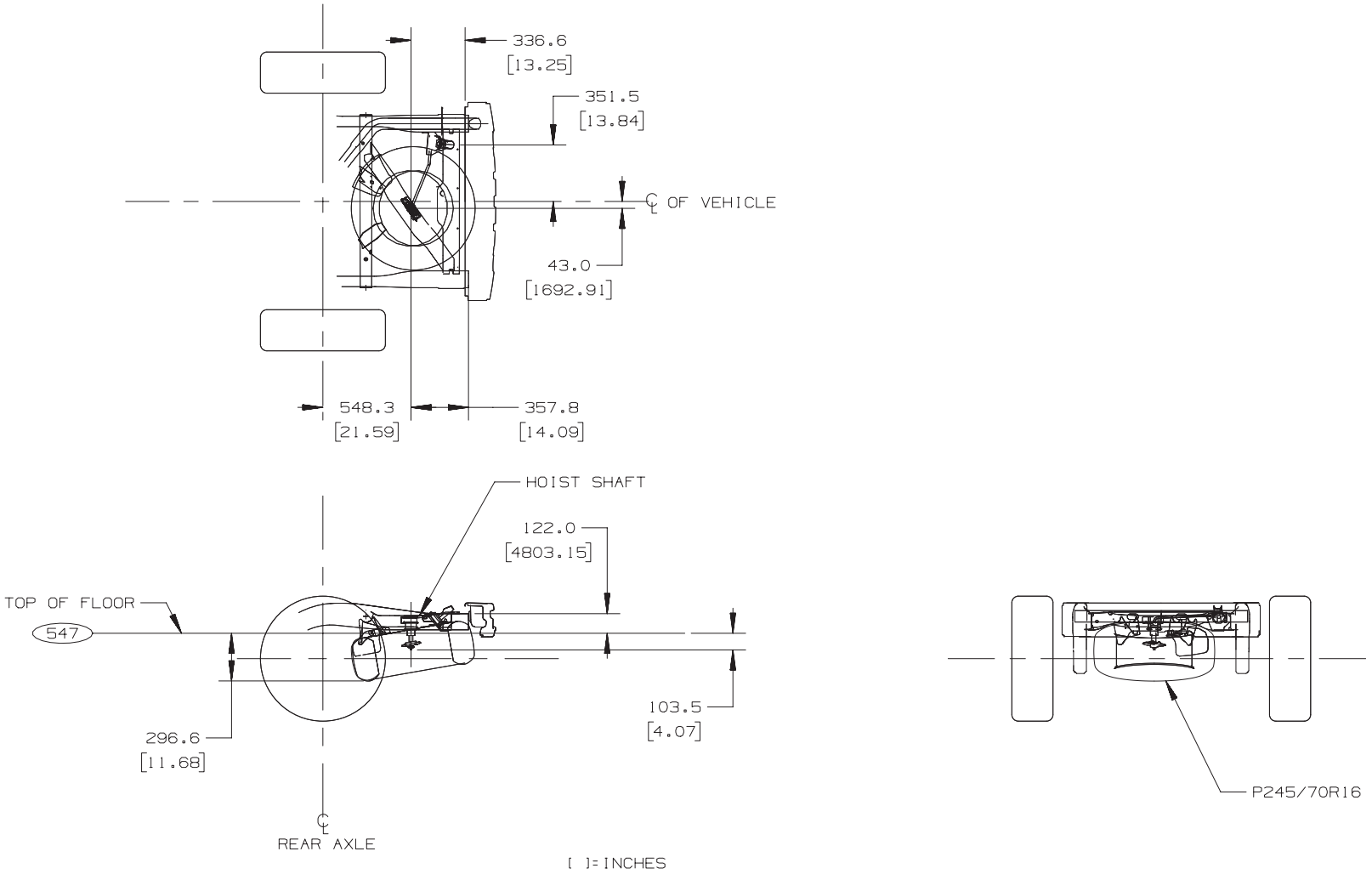

TD005781

S/T 15(5,8)06 Trailer Hitch

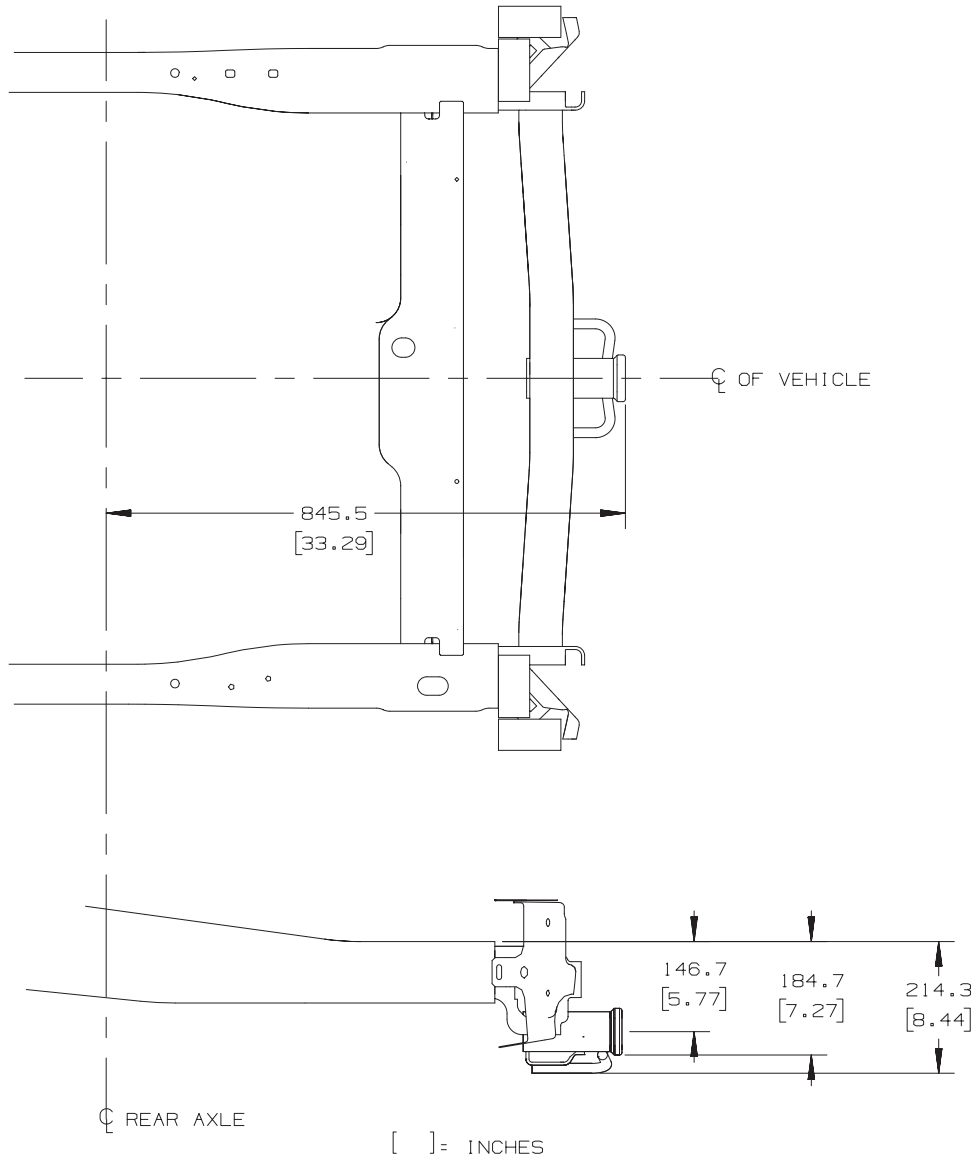

TD005782

S 15(5,8)06 Front Axle/Tire Data Chart

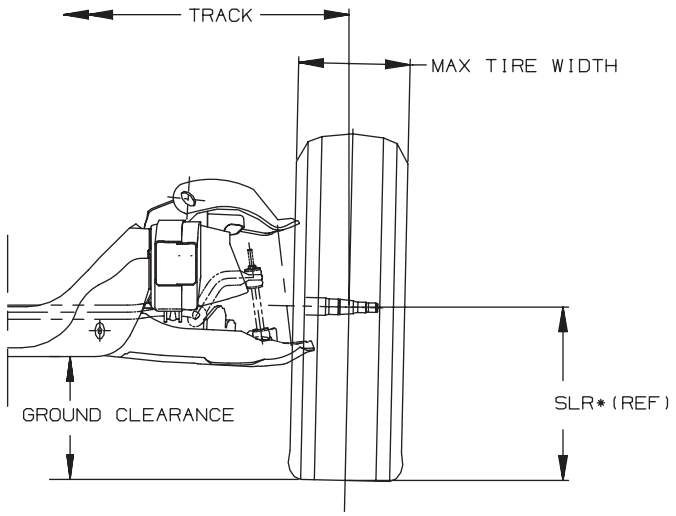

◊ ALL SEASON TIRE
□ ON/OFF ROAD TIRE

* MINIMUM GROUND CLEARANCE TO BE CALCULATED BY USING GROSS AXLE WEIGHT AND INFLATING TIRE PRESSURE TO 35 PSI

SERIES	TIRES	SLR	GVW RANGE	TRACK	WHEEL OFFSET	GROUND CLEARANCE	MAX TIRE WIDTH
S10603	P205/75R15	317.0	4200	1383.6	0.0	233.5	224
	P205/75R15	317.0	4600	1383.6	0.0	233.5	224
				1396.4	-6.4	233.5	224
	P215/65R15	306.0	4600	1396.4	-6.4	222.5	232
S10803	P205/75R15	317.0	4200-4900	1383.6	0.0	233.5	224
				1396.4	-6.4	233.5	224
	P215/65R15	306.0	4600	1396.4	-6.4	222.5	232
S10653	P205/75R15	317.0	4600-4900	1383.6	0.0	233.5	224
				1396.4	-6.4	233.5	224
	P215/65R15	306.0	4900	1396.4	-6.4	222.5	232
S10516	P205/75R15	316.0	4450	1396.4	-6.4	215.0	224
S10506	P205/75R15	316.0	4785	1396.4	-6.4	215.0	224
S15506	□ P245/65R17	354.0	5550	1603.0	50	203.3	255
	◊ P245/70R16	348.0	5550	1603.0	50	197.3	256
S15806	P245/65R17	353.0	6200	1603.0	50	202.3	255

[ ] = INCHES

TD005783

T 15(5,8)06 Front Axle/Tire Chart

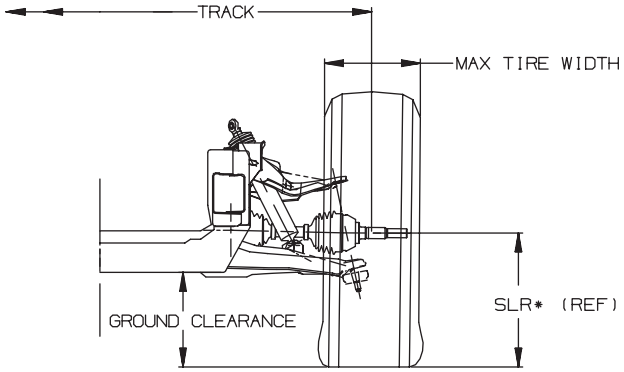

◊ ALL SEASON TIRE

□ ON/OFF ROAD TIRE

SERIES	TIRES	SLR*	GVW RANGE	TRACK	WHEEL OFFSET	GROUND CLEARANCE	MAX TIRE WIDTH
T10603	◊P205/75R15	317.0	4650	1453.6	50.0	217.3	224.0
	□P205/75R15	317.0	4650	1453.6	50.0	217.3	224.0
	P235/75R15	337.0	5150	1453.6	50.0	269.8	247.0
	31 X 10.5	357.0	4650	1553.6	50.0	289.7	269.0
T10803	◊P205/75R15	317.0	4650	1453.6	50.0	217.3	224.0
	□P205/75R15	317.0	4650	1453.6	50.0	217.3	224.0
	P235/75R15	337.0	5150	1453.6	50.0	269.8	247.0
T10653	◊P205/75R15	317.0	4650	1453.6	50.0	217.3	224.0
	□P205/75R15	317.0	4650	1453.6	50.0	217.3	224.0
	P235/75R15	337.0	5150	1453.6	50.0	269.8	247.0
	31 X 10.5	357.0	5150	1553.6	50.0	289.7	269.0
T10516	P205/75R15	316.0	4850	1453.6	50.0	209.6	228.0
	◊P235/70R15	326.0	4850	1453.6	50.0	220.3	252.0
	31 X 10.5	357.0	4850	1553.6	50.0	240.2	269.0
T10506	□P235/75R15	337.0	4850	1453.6	50.0	231.2	252.0
	P205/75R15	316.0	5300	1453.6	50.0	211.2	228.0
	◊P235/70R15	326.0	5300	1453.6	50.0	221.3	252.0
	□P235/75R15	337.0	5300	1453.6	50.0	232.7	252.0
T10643	◊P235/70R15	328.0	5150	1453.6	50.0	249.0	252.0
	□P235/75R15	341.0	5150	1453.6	50.0	262.0	247.0
T15506	◊P245/65R17	352.0	5750	1603.0	50.0	203.3	255.0
	◊P245/70R16	346.0	5750	1603.0	50.0	197.3	255.0
	◊P255/60R17	344.0	5750	1603.0	50.0	197.3	263.0
T15806	P245/65R17	351.0	6400	1603.0	50.0	205.3	255.0

* MINIMUM GROUND CLEARANCE TO BE CALCULATED BY USING GROSS AXLE WEIGHT AND RECOMMENDED TIRE PRESSURE

[ ] = INCHES

TD005784

S/T 15(5,8)06 Rear Axle/Tire Chart

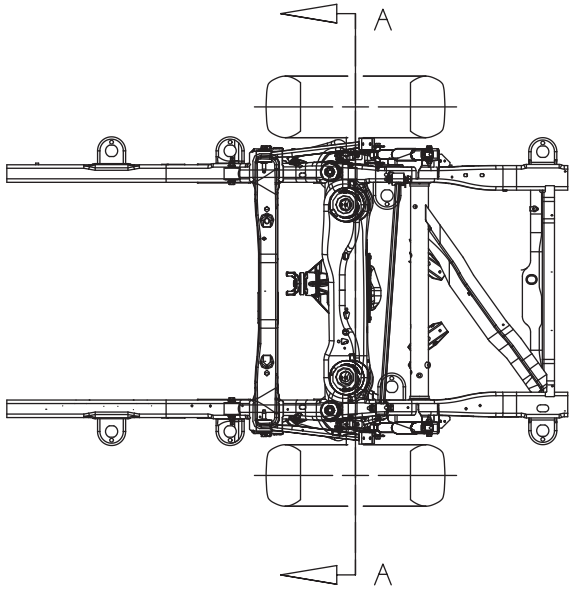

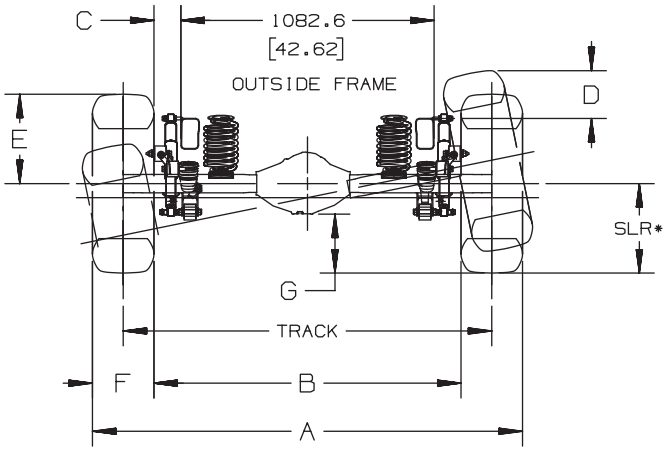

SECTION A-A
ROTATED 90°

* MINIMUM GROUND CLEARANCE TO BE CALCULATED BY USING GROSS AXLE WEIGHT AND INFLATING TIRE PRESSURE TO 35 PSI

SERIES	TIRES	SLR	GVW RANGE	TRACK	WHEEL OFFSET	DIM A	DIM B	DIM C	DIM D	DIM E	DIM F	DIM G
S15506	P245/70R16	346	5550	1576.0	50.0	1839.1 [72.41]	1312.9 [51.69]	115.2 [4.54]	204.2 [8.04]	382.3 [15.05]	263.1 [10.36]	215.5 [8.48]
S15506	P245/65R17	352	5550	1576.0	50.0	1839.1 [72.41]	1312.9 [51.69]	115.2 [4.54]	204.2 [8.04]	382.3 [15.05]	263.1 [10.36]	221.5 [8.72]
S15806	P245/65R17	348	6200	1576.0	50.0	1839.1 [72.41]	1312.9 [51.69]	115.2 [4.54]	204.2 [8.04]	382.3 [15.05]	263.1 [10.36]	217.5 [8.56]
T15506	P245/70R16	344	5750	1576.0	50.0	1839.1 [72.41]	1312.9 [51.69]	115.2 [4.54]	204.2 [8.04]	382.3 [15.05]	263.1 [10.36]	213.5 [8.41]
T15506	P245/65R17	351	5750	1576.0	50.0	1839.1 [72.41]	1312.9 [51.69]	115.2 [4.54]	204.2 [8.04]	382.3 [15.05]	263.1 [10.36]	220.5 [8.68]
T15506	P255/60R17	343	5750	1576.0	50.0	1846.1 [72.68]	1305.9 [51.41]	111.7 [4.40]	198.2 [7.80]	376.3 [14.81]	270.1 [10.63]	212.5 [8.37]
T15806	P245/65R17	347	6400	1576.0	50.0	1839.1 [72.41]	1312.9 [51.69]	115.2 [4.54]	204.2 [8.04]	382.3 [15.05]	263.1 [10.36]	216.5 [8.52]

[ ] = INCHES

TD005785

S/T 15506 Fuel Tank (18.7 gal. capacity)

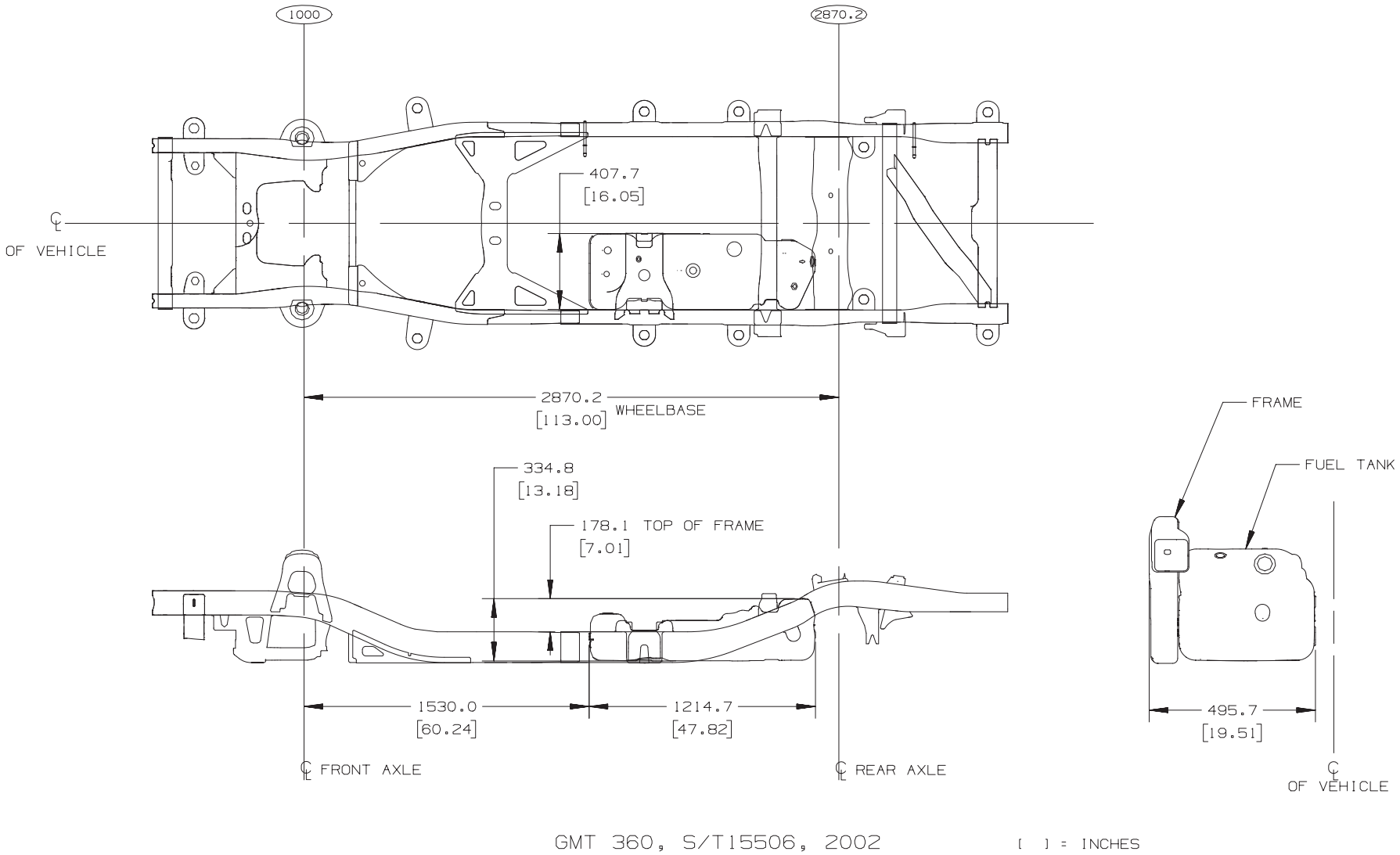

TD005679a

S/T 15806 Fuel Tank (25.7 gal. capacity)

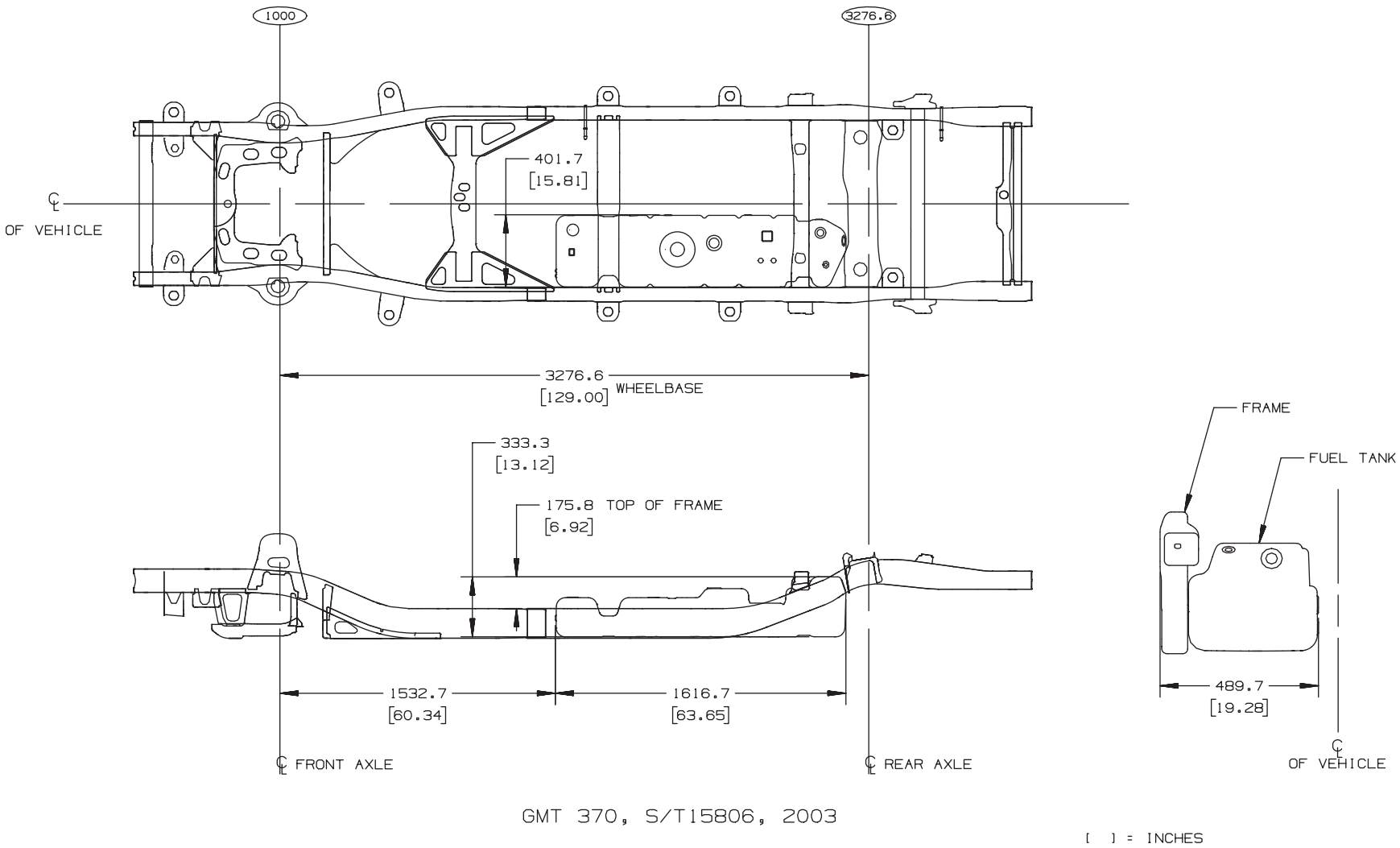

TD005679b

S/T 15506 4.2L Gas Engine Option

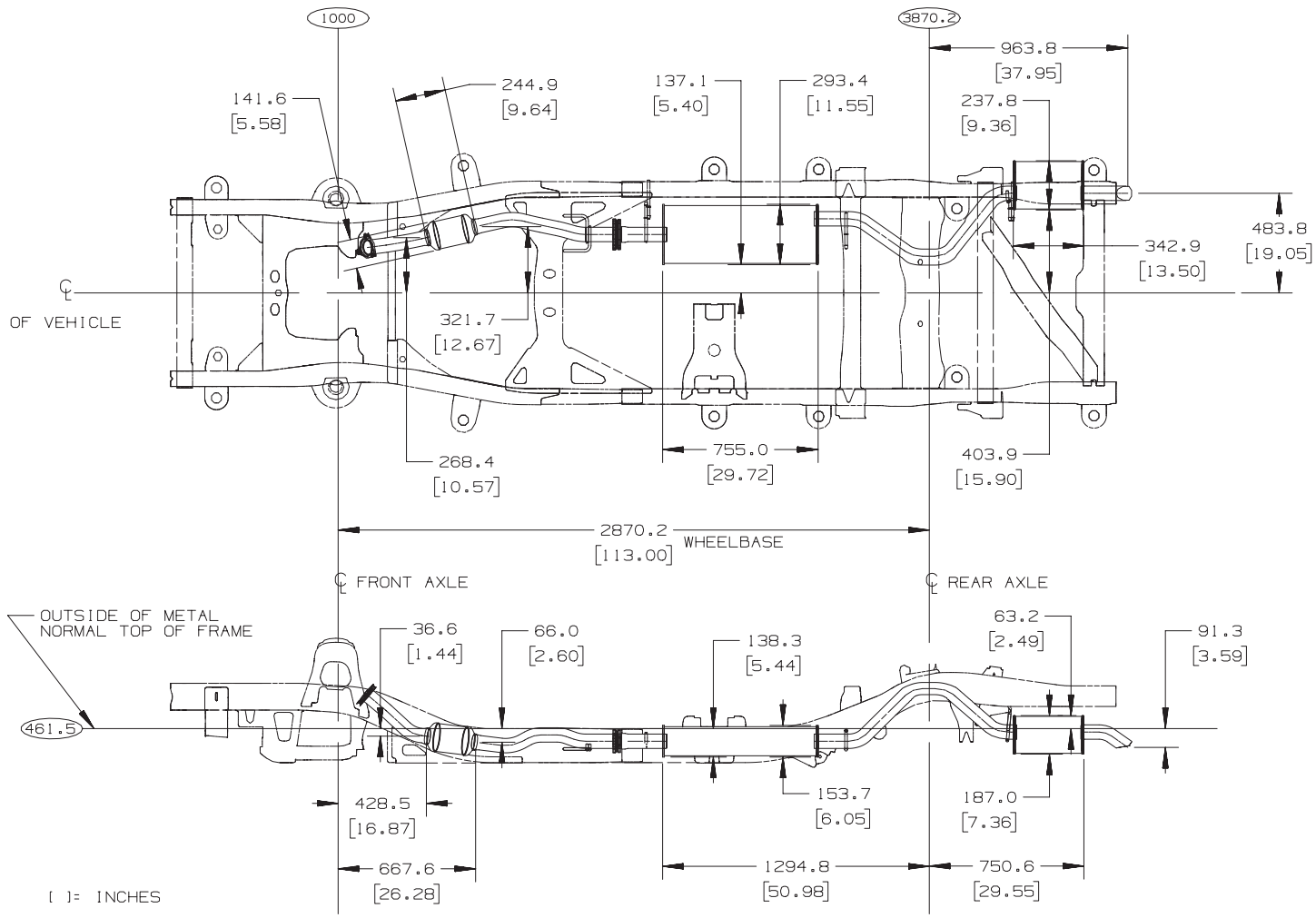

FOR: RPO LL8 (ENGINE GAS, 6 CYL, 4.2L, L6) 2002

TD005786

S/T 15806 4.2L Gas Engine Option

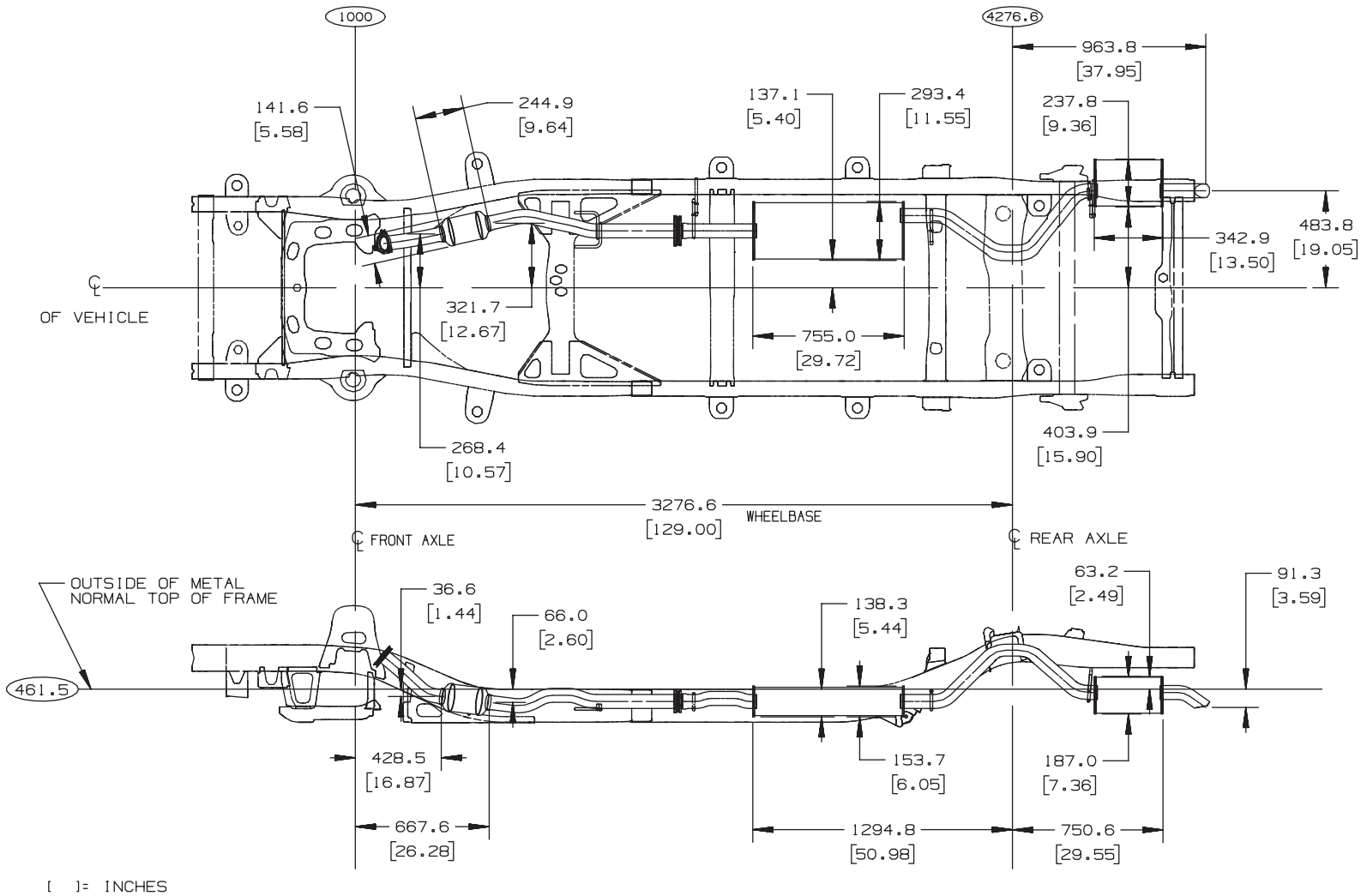

FOR: RPO LL8 ONLY (ENGINE GAS, 6 CYL, 4.2L, L6) 2003

TD005803a

S/T 15806 5.3L Gas Engine Option

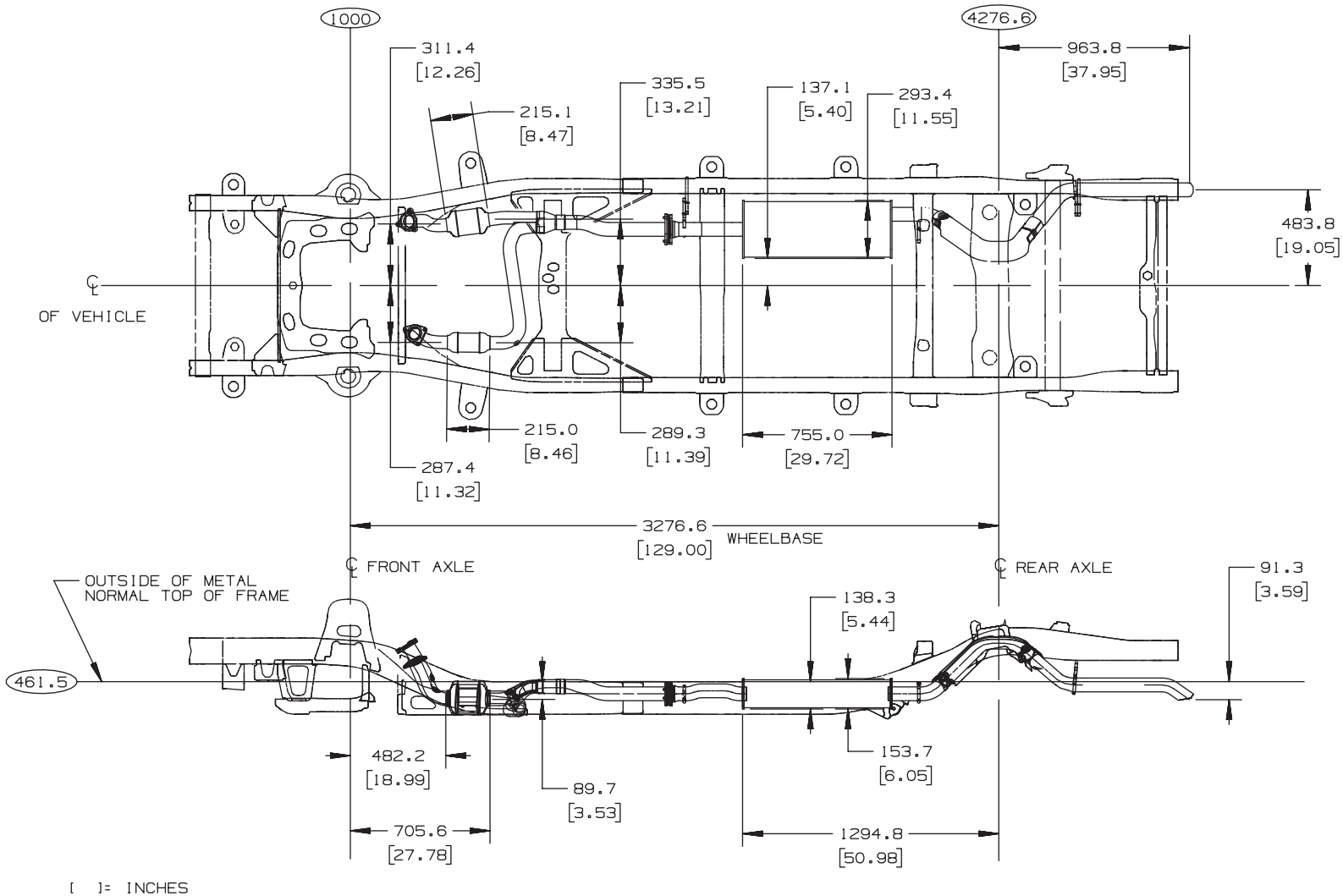

FOR: RPO LM4 ONLY (ENGINE GAS, 8 CYL, 5.3L) 2003

TD005803b